Fermilab Library
0 1160 0038168 5

FERMILAB-UPC-153

November 1981

Fermilab

The Tevatron Abort System

Michael Harrison

(i) Introduction

In this report we shall give a general description of the Tevatron Abort System. Initially we shall review the constraints imposed on the operational characteristics by the Tevatron environment which then lead to the overall design of the system. The major system components are then detailed. We will ignore the beam dump, which has been domumented elsewhere[1,2], as well as the generation of the Abort trigger, which merits a separate discussion of its' own.

(ii) Design Philosophy

The possible catastrophic consequences associated with allowing the circulating beam to impinge directly onto a string of superconducting magnets requires that an Abort System to be able to act swiftly, within a few turns at most, with a guaranteed efficiency of 100%. The Abort System must be clean in terms of both residual and instantaneous radioactivity to minimize possible beam loading on the magnets. Both of these requirements imply a system radically different in concept from the present Main Ring Abort which relies on a relatively slow (20 ms) pulsed magnet to deposit the beam on an internal dump in the DØ long straight section, as well as many other places in the Ring.

The solution we have adopted is to construct an external beam line. lending to a remote beam dump together with a fast single turn extraction system comprising of kicker magnets and magnetic setpa. The total removal of the beam from the machine at the highest energies

requires the long lever arm of a straight section (CØ) to allow adequate beam separation. The kicker magnets, by their very nature, require a warm environment which restricts the possible locations to the 17 and 48 medium straight sections. The 17 location is too remote from the long straight section with an inappropriate phase advance to allow a practical system. Thus before considering anything beyond the gross outlines of the problem we are forced to design a system of kicker magnets at a warm 48 location with an external beam line originating at the following long straight section.

The next problem was to provide sufficient integrated field strength to abort a 1000 GeV beam in both the kicker magnets and the upstream end of the long straight section. Fulfilling this requirement within the aforementioned contraints provided the dominant characteristics of the whole system. The first question to be answered is that of aperture limitations or equivalently how far do we need to kick the beam to enter the Abort channel? The horizontal aperture at CØ (the Abort long straight section) is defined by the beam spot size during resonant extraction and would require a minimum positional change of ~2" to cleanly kick the beam across a septum. A kick of this magnitude would however place the beam squarely in the B49 quadrupoles scraping the dipoles on the way there for good measure. A possible solution would be to widen the Tevatron physical aperture on a small number of dipoles and quadrupoles around B49; this we rejected on the grounds that it essentially required a new superconducting magnet design. The vertical aperture requirements are somewhat less daunting with an intra-beam separation of 1" being sufficient to clear a magnetic septum.

Figures 1 and 2 show the limiting cases in terms of beam aperture; injection and extraction. On these pictures, drawn to scale, we have endeavoured to show the relevant machine apertures and their relationship to the circulating beam. These pictures give an intuitive feeling for the operational tolerances associated with the Abort System.

At 1000 GeV the integrated field at B48 to move the beam vertically by 1" is ~1000 kG-in, not a trivial number by any means but not mind boggling either. A less obvious problem caused by the vertical kick requirement is that a vertical kick implies a subsequent horizontal bend. In order to steer the beam past the downstream quadrupoles a beam separation of ≳10" is required horizontally at this point. A separation of this magnitude would require 13120 kG-in of integrated field distributed symmetrically around CØ, which, if composed of Lambertson magnets, would require a long non-symmetric string of physically very large magnets. We would also like to use the long straight section to shield the downstream superconducting magnets from the Abort losses by introducing a dog-leg to point the beam crossing the septum away from the downstream magnets. This would imply more conventional magnets in the long straight competing with the Lambertsons for valuable real estate in this region.

It was at this point that we chose the less orthodox (but more elegant) solution which effectively moves the initial band center of the Abort line upstream from the long straight to the B48 half cell. This is accomplished by reducing the length of the B48-3 dipole by approximately 50%, together with the corresponding C11-3 dipole. The effect of this length reduction is several-fold; firstly we have created a longer medium straight section allowing us to increase the number of kicker magnets and hence reduce the necessary field strength to a more manageable maximum of 3.7 kG. The second effect is to provide a ~4 mrad change in the Tevatron closed orbit which angles the beam away from the downstream superconducting magnets, pointing instead directly towards the beam dump. The unwanted abort losses will thus be directed towards the dump rather than the magnets. The drawback to this scheme has to do with the rather obvious fact that we are not allowed to remove dipoles at will from the machine and the missing ~8 mrad of bend (B48-3, C11-3) has to be supplied by warm magnets in the long straight section itself. These magnets, which consist

of Lambertsons and Current Sheet Septa, will have the beam circulating in the field region as opposed to the field-free region and so will have higher magnetic tolerances than those normally associated with magnets of this type. The horizontal geometry of the Abort System is shown in Figure 3; it is worth noting that the aborted beam orbit is solely determined by the missing half dipole. The exact positions and offsets of the magnets are given in Appendix A; the output of a program written by S. Ohnuma. The vertical geometry is a straight line with the dump centered 1" higher than the Tevatron to account for the vertical kick across the Lambertson setpum.

(iii) Major System Components

a) Kicker Magnet and Pulsing Unit

A detailed description of this equipment has already been published.[3] The principle feature of this design is the high field criterion. To abort a 1000 GeV beam requires four 72" kicker modules with a peak field of 3.7 kG. To achieve this kind of field implies a correspondingly high current of 23 kA. The system performance requires the kicker to have a 1.5 μS rise time (10-90%) in order to minimize the beam losses when firing the kicker during the 1.8 μS gap in the circulating beam. The pulsing unit H.V. supply must also track the beam energy which puts the extra requirement that the system behaviour remain more or less constant over the full dynamic range.

b) The Lambertson magnets in the upstream region of the long straight section provide the initial beam separation. These magnets run in series with the Tevatron dipoles and are capable of running D.C. at a 4435 A excitation. The magnets have trim coils built directly into the magnet allowing a ±4% steering capability at 1000 GeV. The magnet has a ±2" good field region horizontally ($\Delta B \leq 5$ G) for the maximum beam separation, with this geometry, of 1.8". The vertical aperture of the magnets is ~1" which represents the limiting vertical aperture in the machine. The maximum field excitation (1000 GeV) is 11.09 kG which for a string of three magnets provides a 5.5 mrad

CØ TEVATRON ABORT SCHEMATIC
FIG. # 3

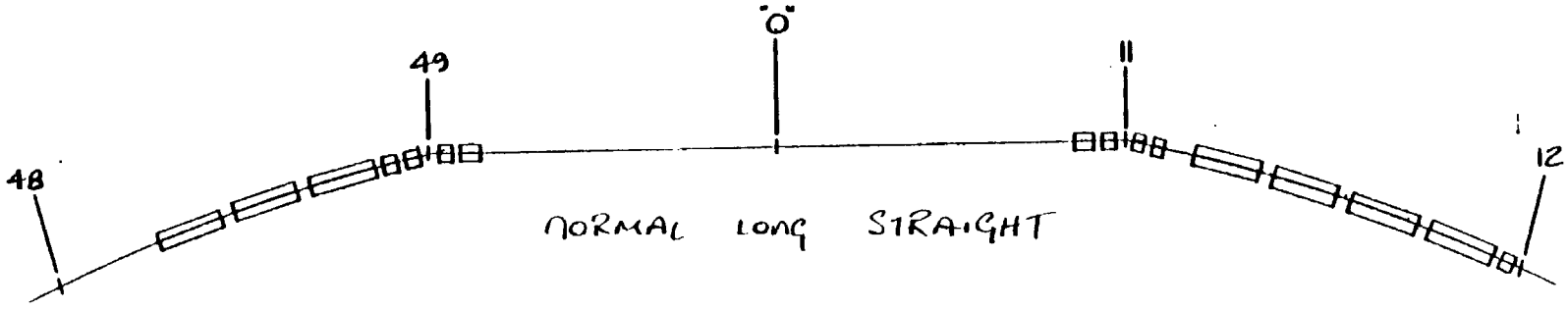

ABORT LONG STRAIGHT

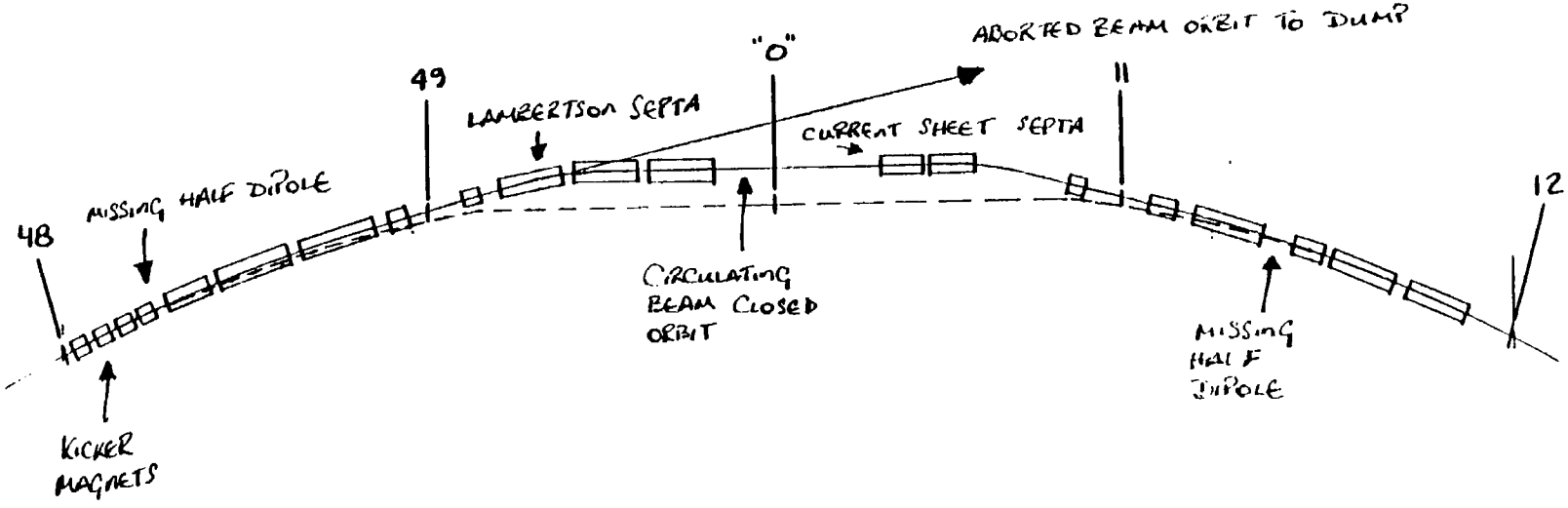

bend. A more complete summary of the magnet specifications is given in Appendix B. This type of magnet will also be used in the Extraction Channel.

c) Current Septum Magnets

These magnets are used to provide the extra ~3 mrad of bend to bring the circulating beam closed orbit back onto the 'normal' orbit. These magnets, which also run in series with the main bus, have a maximum field excitation of 13.29 kG within a horizontal good field region, approximately matched to the superconducting dipoles, of ±1.0". The magnets have trim coils allowing a ~ ±3.0% field variation at the highest excitation. The beam separation at the upstream end of the first current septum is ~5.0" which is sufficient with this design to position the circulating beam in the center of the dipole field whilst at the same time constraining the aborted beam to an aperture no smaller than 2". Specifications of this magnet are also given in Appendix B.

(iv) Lattice Perturbations

Removing and repositioning magnets in the machine must be done with a certain amount of care to make sure that the lattice structure is affected as little as possible. The fact that the relative change in quadrupole position is very small from the normal lattice, ensures that the focussing properties remain essentially unchanged (β_x at C11 changes by 6 cms in 100 ms). The momentum dispersion which depends more on the bending elements than the quadrupoles is indeed changed, but restricting the modifications to a localized area and keeping the total bend angle constant tends to minimize the perturbations and we find changes at the 5% level which should pose no operational problems.

(v) Acknowledgements

The design of the Abort System which we have presented represents the collective ideas of many people; major contributions having been made by

Frank Turkot, Ed Gray, Thornton Murphy and Helen Edwards.

(vi) References

1. "A High Intensity Beam Dump for the Tevatron Abort System", N. Mokhov et al., IEEE 1981 Particle Accelerator Conference, Vol. II, Pg. 2774

2. "Instrumentation for the Tevatron Beam Dump", E. Harms et al., 1981 Particle Accelerator Conference, Vol. II, Pg. 2771

3. "A 3 kG Kicker Magnet System for the Tevatron Beam Abort System", G. Krafczyk et al., IEEE 1981 Particle Accelerator Conference, Vol. II, Pg. 2769

APPENDIX A - Computer Printout from the Czero Program (S. Ohnuma) giving magnet positions and offsets.

10.	(X0, Y0, Y-ABORT:	-660.013	32.403	32.614)
11.	(X0, Y0, Y-ABORT:	-430.014	32.746	33.589)
12.	(X0, Y0, Y-ABORT:	-200.014	32.666	34.565)
13.	(X0, Y0, Y-ABORT:	354.361	31.967	36.916)
14.	(X0, Y0, Y-ABORT:	512.969	31.648	37.589)
15.	(X0, Y0, Y-ABORT:	671.576	31.094	38.262)
16.	(X0, Y0, Y-ABORT:	1019.677	29.617	39.738)
17.	(X0, Y0, Y-ABORT:	1086.513	29.334	40.022)
18.	(X0, Y0, Y-ABORT:	1327.931	28.310	41.046)
19.	(X0, Y0, Y-ABORT:	1428.153	27.884	41.471)
20.	(X0, Y0, Y-ABORT:	1483.152	27.602	41.704)
21.	(X0, Y0, Y-ABORT:	1625.147	26.424	42.307)
22.	(X0, Y0, Y-ABORT:	1806.057	24.237	43.074)
23.	(X0, Y0, Y-ABORT:	1932.121	22.434	43.609)
24.	(X0, Y0, Y-ABORT:	1987.113	21.492	43.842)
25.	(X0, Y0, Y-ABORT:	2129.084	18.611	44.444)
26.	(X0, Y0, Y-ABORT:	2239.051	15.932	44.910)
27.	(X0, Y0, Y-ABORT:	2380.994	11.898	45.513)
28.	(X0, Y0, Y-ABORT:	2470.120	9.052	45.891)
29.	(X0, Y0, Y-ABORT:	2511.396	7.711	46.066)

X & Y ERRORS AT MR STATION #12: .00000 .00019

DE OF #48-5 SLOT Z= -1408.065
UE OF #11-2 SLOT Z= 1428.175 (EXCEPT FOR ITYP=1 ARRANGEMENT)

APPENDIX B - Magnet Specifications for the Abort Magnets

```
  ALL LENGTHS IN INCHES

  PERCENTAGE REDUCTION OF BEND ANGLE IN HALF-DIPOLES?
? 4.5
   SLOT LENGTH:  HALF DIPOLES    126.08
                 C-MAGNETS       158.61
   C-MAGNET BEND ANGLE (EACH)    1.4897 MRAD

  C11 DIPOLE ARRANGEMENT CODE ITYP?

    1 = (FREE)(HB)(3B)          2 = (HB)(FREE)(3B)
    3 = (B)(FREE)(HB)(2B)       4 = (HB)(B)(FREE)(2B)

? 3
  DICTIONARY NEEDED? YES=1, NO=0
? 1
   X0, Y0, Y-ABORT: (B49)-(C11) DOUBLER  SYSTEM
  1. UPSTREAM END OF HALF-BEND B48-3 SLOT
  2. DOWNSTREAM END OF HALF-BEND B48-3 SLOT
  3. UPSTREAM SUPPORT OF B48-4 DIPOLE
  4. DOWNSTREAM SUPPORT OF B48-4 DIPOLE
  5. UPSTREAM SUPPORT OF B48-5 DIPOLE
  6. DOWNSTREAM SUPPORT OF B48-5 DIPOLE
  7. CENTER OF 82F QUADRUPOLE
  8. CENTER OF 99D QUADRUPOLE
  9. UPSTREAM END OF LAMBERTSON L1 SLOT
 10. DOWNSTREAM END OF L1 SLOT
 11. DOWNSTREAM END OF L2 SLOT
 12. DOWNSTREAM END OF L3 SLOT
 13. UPSTREAM END OF C-MAGNET C1 SLOT
 14. DOWNSTREAM END OF C1 SLOT
 15. DOWNSTREAM END OF C2 SLOT
 16. END OF WARM FREE SPACE
 17. CENTER OF 99F QUADRUPOLE
 18. CENTER OF 82D QUADRUPOLE
 19. TO 23.  VARIOUS POSITIONS IN C11-2 & C11-3 DIPOLES
       (SEE BELOW)
 24. UPSTREAM SUPPORT OF C11-4 DIPOLE
 25. DOWNSTREAM SUPPORT OF C11-4 DIPOLE
 26. UPSTREAM SUPPORT OF C11-5 DIPOLE
 27. DOWNSTREAM SUPPORT OF C11-5 DIPOLE
 28. CENTER OF C12-1(32D) QUADRUPOLE
 29. MAIN RING C12 STATION MARK
```

```
19. UPSTR. END OF C11-2 SLOT
20. UPSTR. SUPPORT OF C11-2 DIPOLE
21. DOWNSTR. SUPPORT OF C11-2 DIPOLE
22. UPSTR. END OF HALF-BEND C11-3 SLOT
23. DOWNSTR. END OF C11-3 SLOT

  ABORTED BEAM:
       Y-ABORT = .00424158*X0 +  35.4133
     FOR MR COORDINATE SYSTEM:
       Y-ABORT = .00467139*X +  8.2807

  *** WARM SPACE LOOKS LIKE ***

 (145.7)-(LAMBERTSONS)-(200.0)-(MRC0)-(354.4)-(C-MAGNETS)-(348.1)

 BEAM SEPARATION, UPSTR. END OF C-MAG SLOTS:     4.95 (POSITION #13.)
                  DOWNSTR. END OF WARM SPACE:   10.12 (POSITION #16.)

 X & Y ERRORS AT MR STATION #12:    .00000    .00019

  BEAM SEPARATIONS OK ?
    IF YES, TYPE 1  FOR A LIST OF ALL ELEMENTS
    IF NOT, TYPE 0  FOR NEW SYSTEM INPUTS
? 1
      1. (X0, Y0, Y-ABORT: -2038.074    20.386    20.386)

      2. (X0, Y0, Y-ABORT: -1912.028    23.212    23.212)

      3. (X0, Y0, Y-ABORT: -1857.039    24.290    24.290)

      4. (X0, Y0, Y-ABORT: -1715.058    26.621    26.621)

      5. (X0, Y0, Y-ABORT: -1605.067    27.980    27.980)

      6. (X0, Y0, Y-ABORT: -1463.072    29.159    29.159)

      7. (X0, Y0, Y-ABORT: -1348.576    29.693    29.693)

      8. (X0, Y0, Y-ABORT: -1107.158    30.717    30.717)

      9. (X0, Y0, Y-ABORT:  -890.012    31.638    31.638)
```

Figure 1

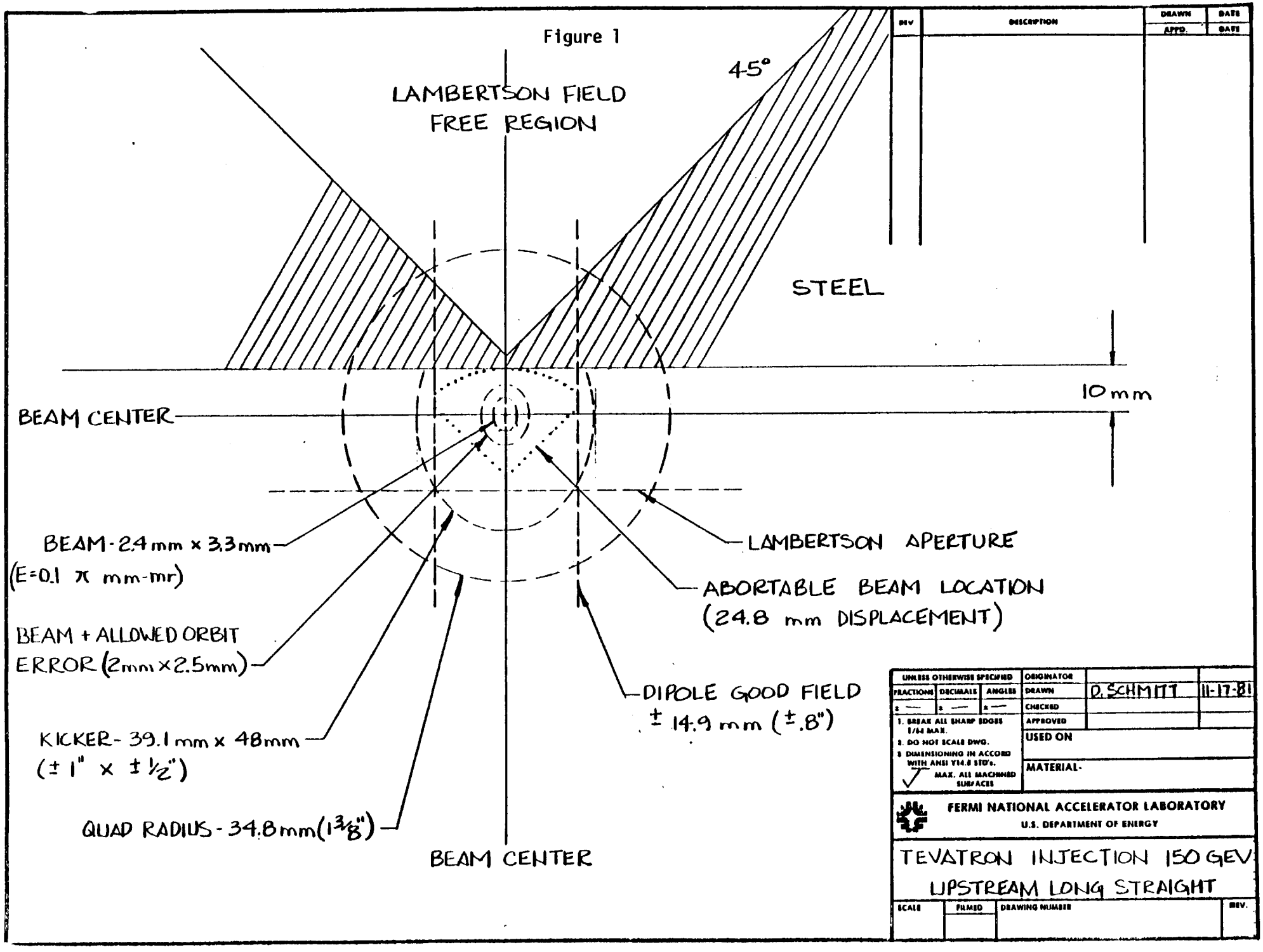
LAMBERTSON FIELD
FREE REGION
45°
STEEL
10 mm
BEAM CENTER
BEAM - 2.4 mm x 3.3 mm
(E=0.1 π mm-mr)
BEAM + ALLOWED ORBIT
ERROR (2mm x 2.5mm)
KICKER - 39.1 mm x 48mm
(± 1" x ± ½")
QUAD RADIUS - 34.8 mm (1 3/8")
BEAM CENTER
LAMBERTSON APERTURE
ABORTABLE BEAM LOCATION
(24.8 mm DISPLACEMENT)
DIPOLE GOOD FIELD
± 14.9 mm (± .8")
REV
DESCRIPTION
DRAWN
DATE
APPD.
DATE
UNLESS OTHERWISE SPECIFIED
FRACTIONS
DECIMALS
ANGLES
1. BREAK ALL SHARP EDGES 1/64 MAX.
2. DO NOT SCALE DWG.
3. DIMENSIONING IN ACCORD WITH ANSI Y14.5 STD's.
MAX. ALL MACHINED SURFACES
ORIGINATOR
DRAWN
D. SCHMITT
11-17-81
CHECKED
APPROVED
USED ON
MATERIAL-
FERMI NATIONAL ACCELERATOR LABORATORY
U.S. DEPARTMENT OF ENERGY
TEVATRON INJECTION 150 GEV
UPSTREAM LONG STRAIGHT
SCALE
FILMED
DRAWING NUMBER
REV.

Figure 2

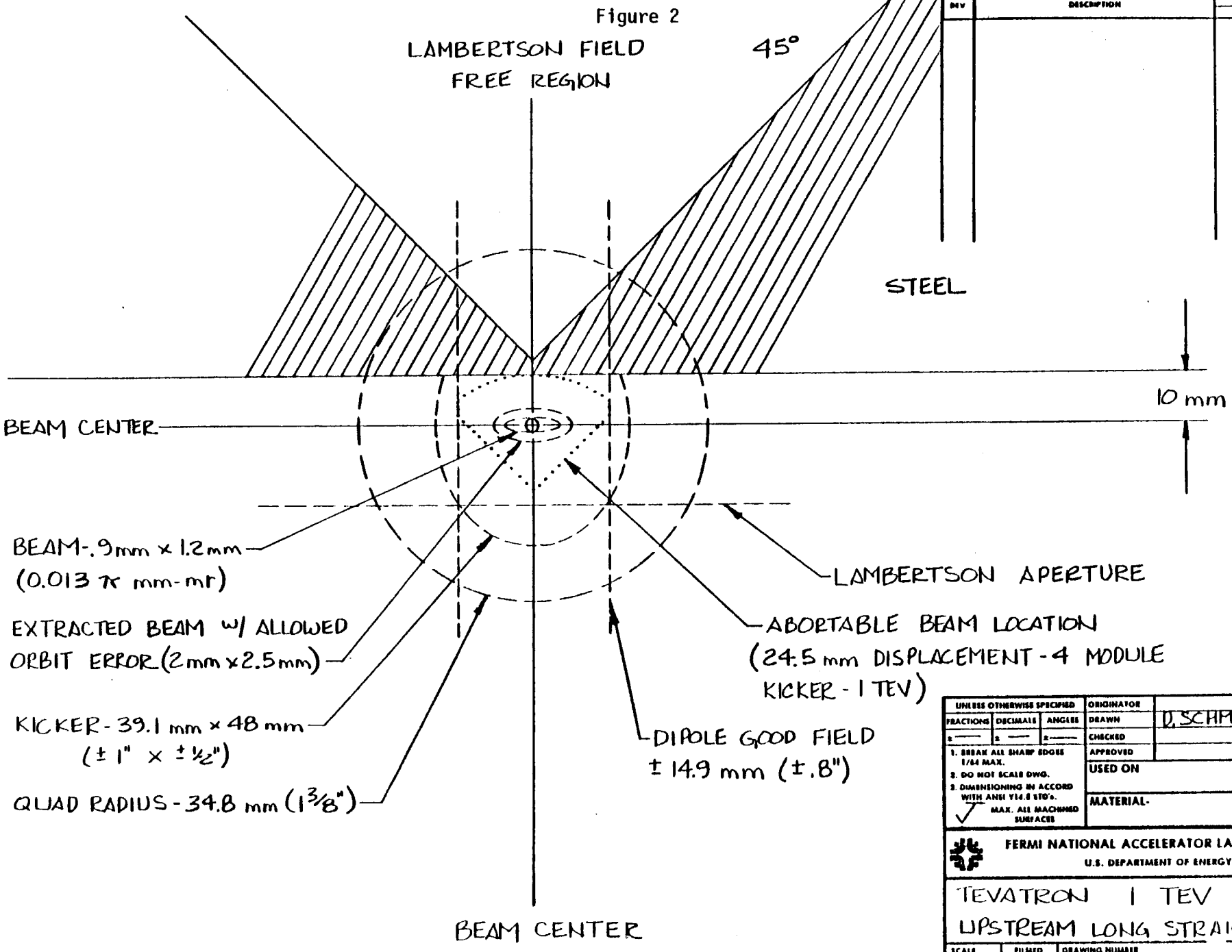

REV	DESCRIPTION	DRAWN / APPD.	DATE / DATE

UNLESS OTHERWISE SPECIFIED			ORIGINATOR		
FRACTIONS	DECIMALS	ANGLES	DRAWN	D. SCHMITT	11.17.81
±	±	±	CHECKED		
1. BREAK ALL SHARP EDGES 1/64 MAX.			APPROVED		
2. DO NOT SCALE DWG.			USED ON		
3. DIMENSIONING IN ACCORD WITH ANSI Y14.5 STD's.			MATERIAL-		
✓ MAX. ALL MACHINED SURFACES					

FERMI NATIONAL ACCELERATOR LABORATORY
U.S. DEPARTMENT OF ENERGY

TEVATRON 1 TEV
UPSTREAM LONG STRAIGHT

SCALE	FILMED	DRAWING NUMBER	REV.

NATIONAL ACCELERATOR LABORATORY

ENGINEERING NOTE

SECTION	PROJECT	SERIAL-CATEGORY	PAGE

SUBJECT: CURRENT SEPTUM TEVATRON ABORT MAGNET 1000 GEV D.C.

NAME:

DATE:

REVISION DATE:

MAGNETIC FIELD:

Central Field * 13.29 KG

Uniformity ±5G over ± 1"

POWER:

DC Power * 40.6 KW

Current * 4435 A

Voltage † 9.16 V

Copper Temp. Ave. * 72° F

Resist @ Temp. * 2.0 mΩ

Inductance 1.4 mH

COOLING:

Water Temp. Rise * 23 °F

Total Flow † 12.0 GPM

Pressure Drop † 50.0 PSI

COIL DATA:

Conductor O.D. * 1.14" x 0.986"

Hole Diameter * 0.5"

Turns 8

Water Paths 2

Ave. Turn Length 150" x 2

WEIGHTS:

Coil & Insul. 410 lb.

Core 11300 lb.

Support

Total Magnet Assembly

CALCULATION CONSTANTS:

OUTLINE DIMENSIONS

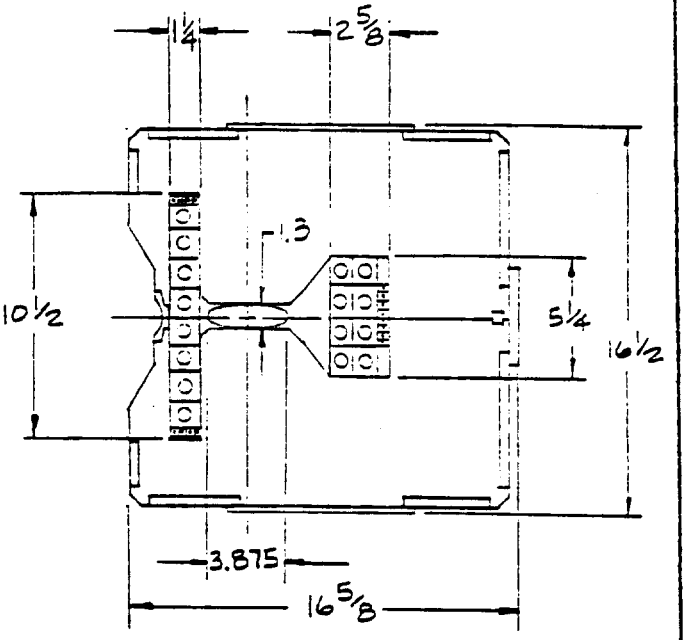

CROSS SECTION

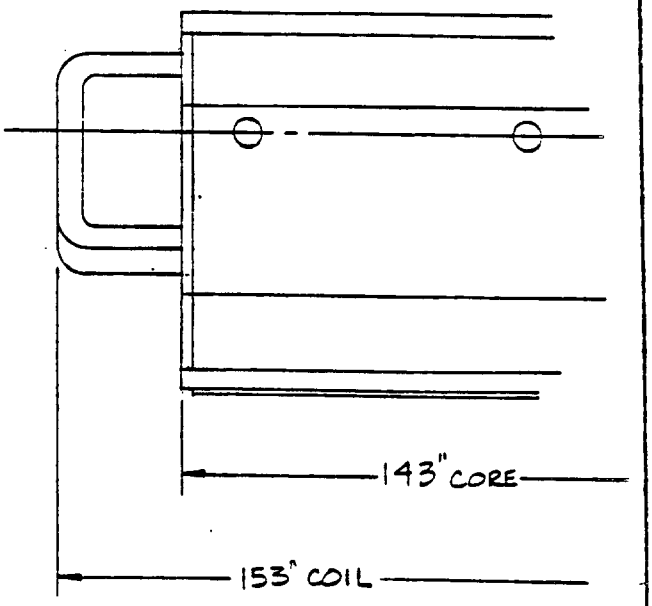

PLAN VIEW

ENGINEERING NOTE

SUBJECT ABORT/EXTRACTION SYMMETRIC LAMBERTSON 1000 GeV D.C.

NAME

DATE

REVISION DATE

PAGE

MAGNETIC FIELD:

Central Field * 11.09 KG

Uniformity across 4.0" gap <5 G

POWER:

DC Power * 35.5 kW

Current * 4435 A

Voltage † 8.0 V

Copper Temp. Ave. * 70°F

Resist @ Temp. * 0.0018 Ω

Inductance 310 μH/m (1.7 mH)

COOLING:

Water Temp. Rise * 20.5°F

Total Flow † 11.8 GPM

Pressure Drop † 50 PSI

COIL DATA:

Conductor O.D. * 0.98" * 1.33"

Hole Diameter * 0.5"

Turns 6

Water Paths 2

Ave. Turn Length 225" * 2

WEIGHTS:

Coil & Insul. 1036 lb.

Core 16700 lb.

Support

Total Magnet Assembly

CALCULATION CONSTANTS:

OUTLINE DIMENSIONS

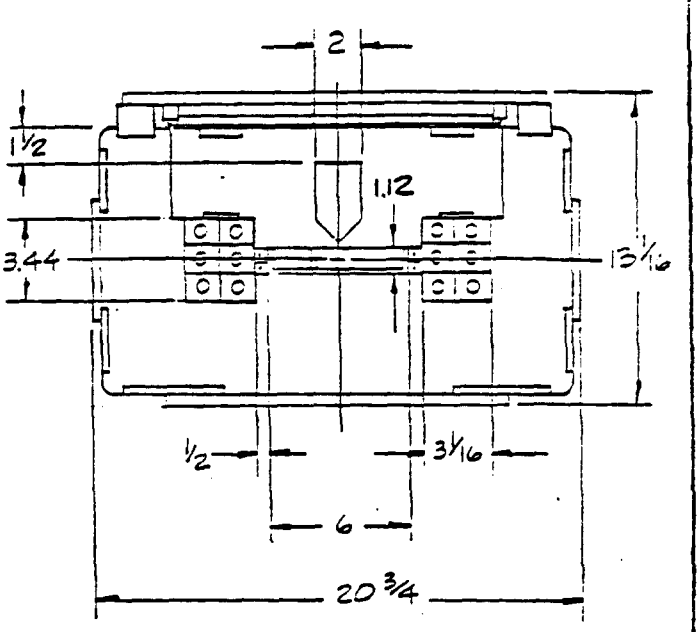

CROSS SECTION

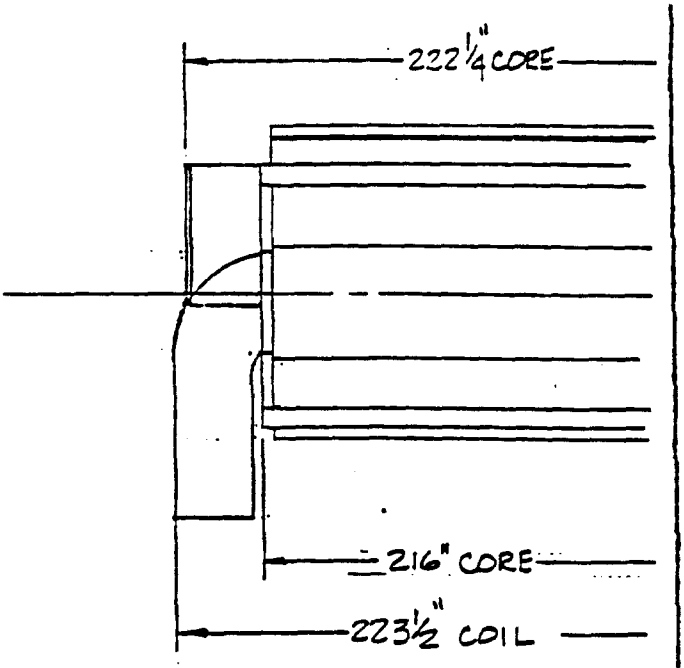

PLAN VIEW