FERMILAB-LU-234-B

Litton Klystron
L-5859

Handling and Operation Manual

Prepared by:

Litton Systems, Inc.
Electron Devices Division
960 Industrial Road
San Carlos, California 94070

TABLE OF CONTENTS

KLYSTRON HANDLING & OPERATION MANUAL
L-5859

1. REMOVAL FROM SHIPPING CONTAINER

2. INSTALLATION OF X-RAY SHIELD ONTO ELECTROMAGNET

3. INSTALLATION OF KLYSTRON INTO ELECTROMAGNET

4. INSTALLATION OF X-RAY SHIELDING COOLING HOSES, AND R.F. INPUT CABLE

5. OPERATION OF THE KLYSTRON

6. X-RAY SHIELD KIT PARTS LIST (Litton Drawing No. 433467)

7. LITTON DRAWING NO. 373160 (Klystron, Focus Coil Application)

8. LITTON DRAWING NO. 432304-JA (R.F. Input Connector Wrench)

9. OPERATING HAZARDS

KLYSTRON HANDLING & OPERATION MANUAL
L-5859

1.0 Removal from Shipping Container

1.1 Remove the lid from the shipping container. Make sure that, when lifting the lid off, it is lifted high enough to clear the output waveguide of the Klystron.

1.2 Remove the bolts from the two side rails. The Klystron can now be raised to vertical. See Figures 1, 2, and 3.

1.3 Connect a lifting bridle to the two lifting eyes and with an overhead crane, raise the Klystron to vertical. (**Caution:** When lifting the Klystron, provision must be made for movement of either the shipping container or the overhead crane). Ensure that the latching mechanism at the bottom of the side rails latch. Note that to lower the Klystron back down requires the latches to be released by pulling the attached cables. Note: It is recommended that the bridle consist of a spreader bar with a centered loop or eye bolt to which the hook of an overhead crane will attach. The spreader bar is to support two hooks on 21 inch centers. These hooks must fit a 1-1/4 inch I.D. eye bolt and be suspended at least 17 inches, at their lifting surfaces, from the spreader bar. This bridle assembly must be capable of safely lifting at least 1000 lbs. (The Klystron weighs approximately 800 lbs.)

1.4 Once the Klystron is vertical, install the Ion pump magnet. Ensure that the Ion pump insulator is not struck or damaged in any way. (Note: The Ion pump magnet can be installed later, if desired).

1.5 Remove the bolts that hold the collector end of the Klystron to the shipping cradle. Remove and collect any washers/shims that were between the Klystron and the shipping cradle. (These shims are used to minimize the axial force imposed on the Klystron when bolting it into the shipping cradle and must be installed when the Klystron is returned to the shipping container.)

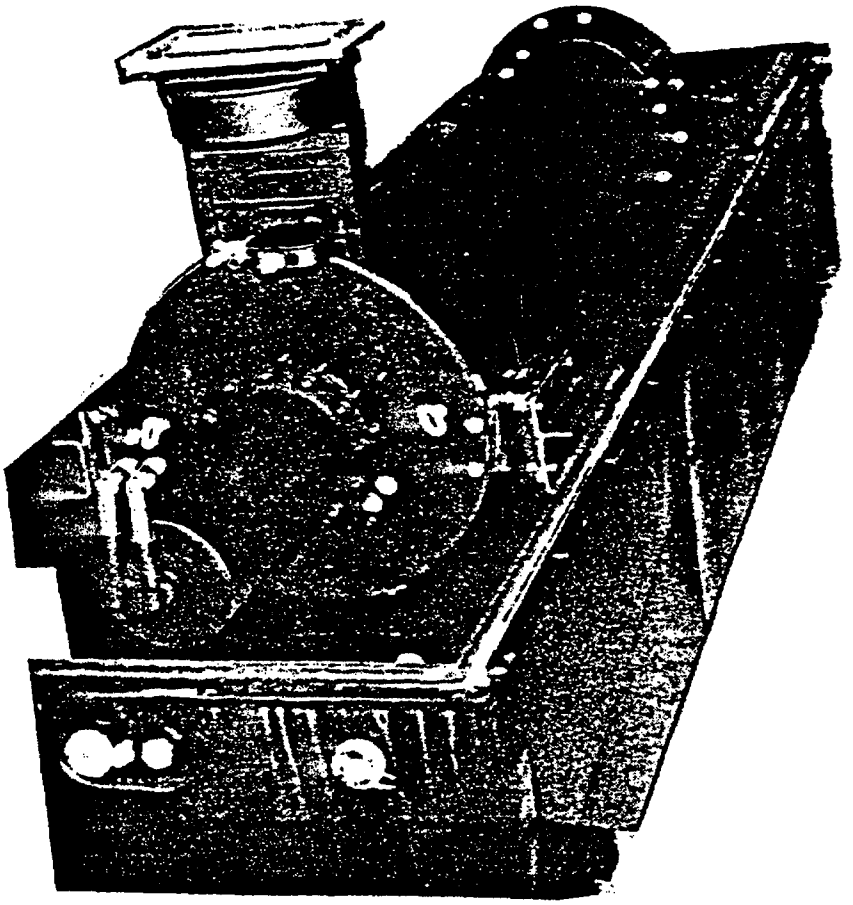

FIGURE 1. THE KLYSTRON IN ITS SHIPPING CONTAINER

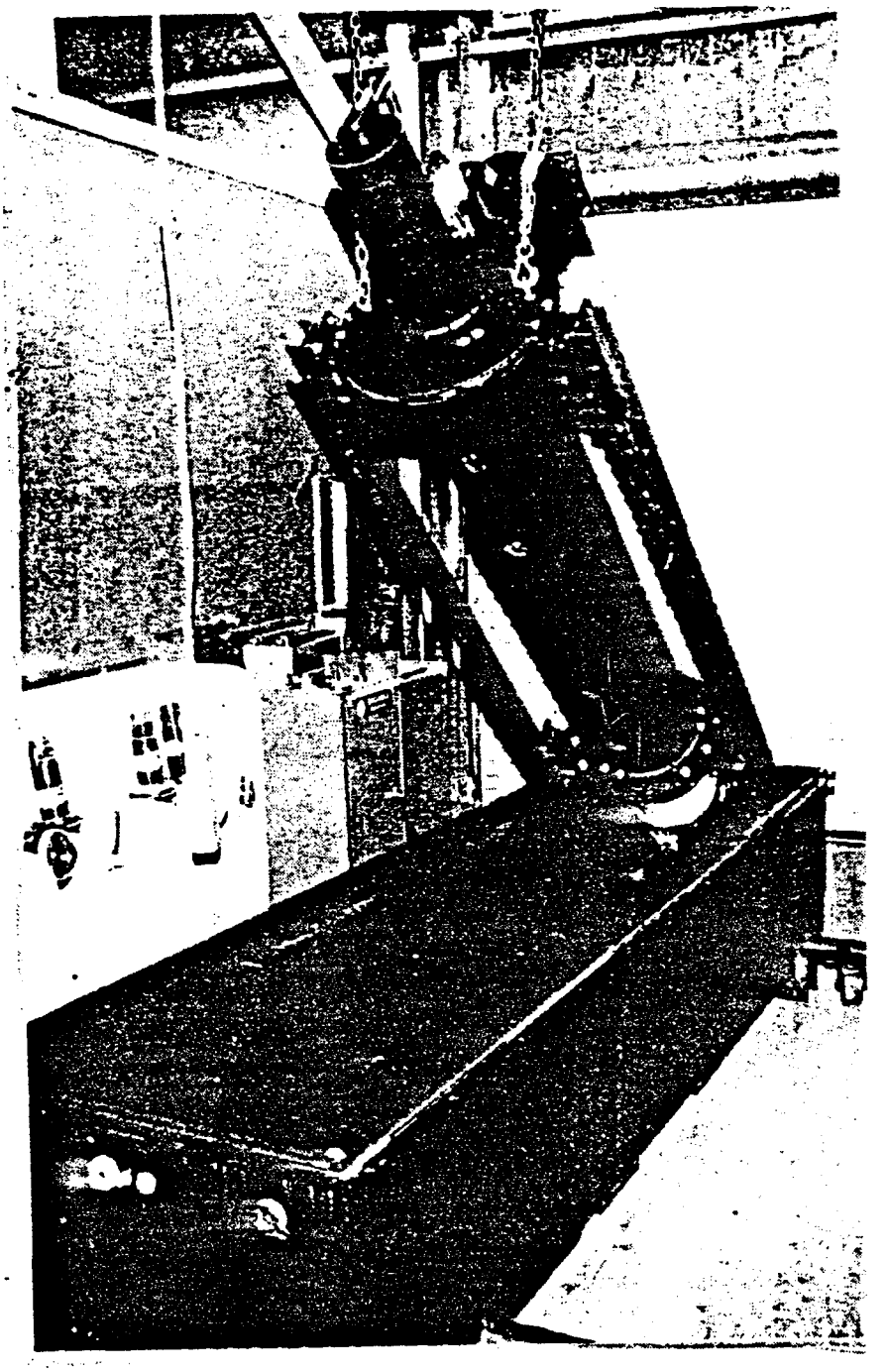

FIGURE 2. THE KLYSTRON BEING RAISED TO THE VERTICAL POSITION.

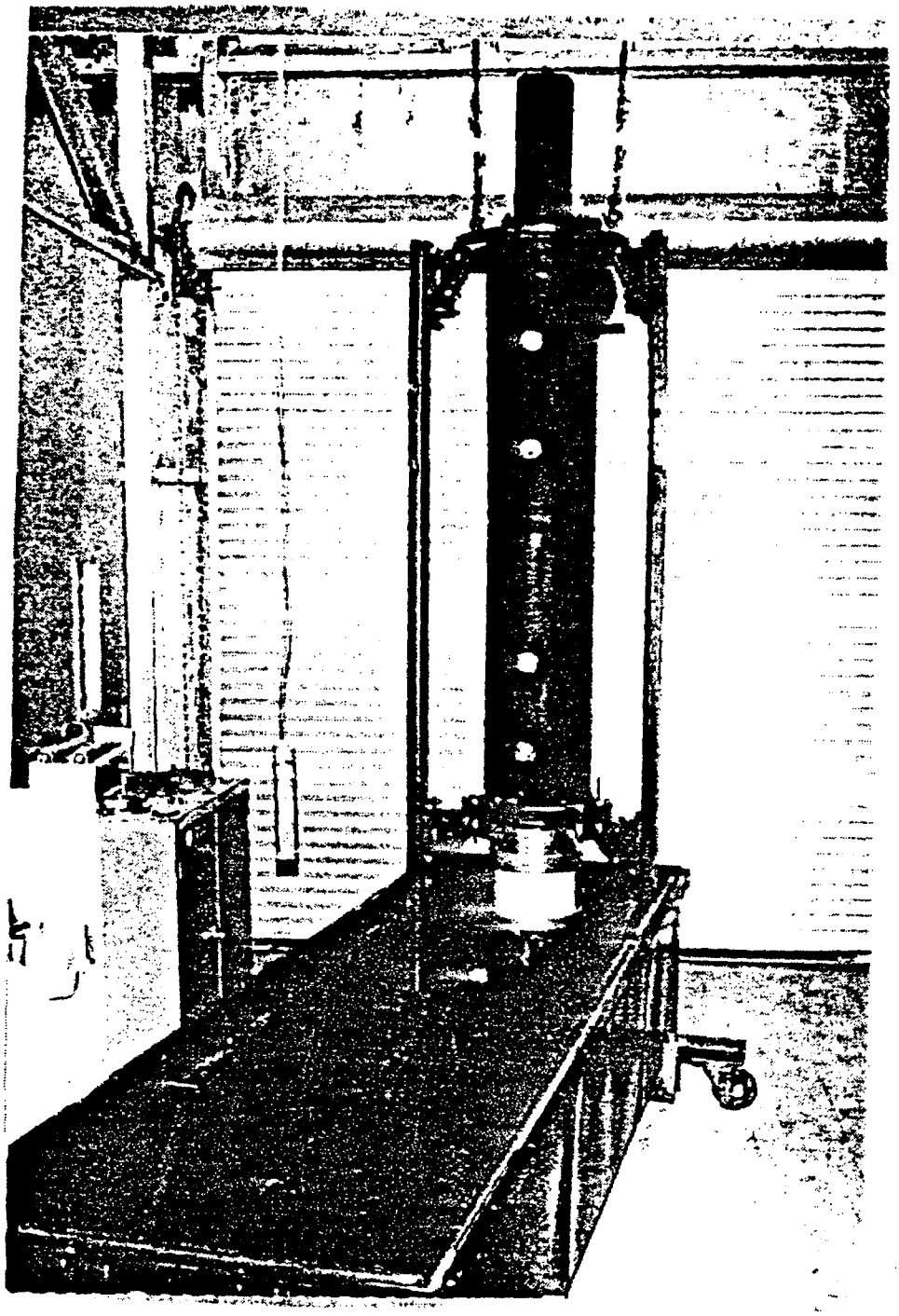

FIGURE 3. THE KLYSTRON IN THE VERTICAL POSITION.

1.6 Remove the braces supporting the Klystron collector. Store these in the shipping container (they should be used whenever the Klystron is returned to the shipping container).

1.7 Remove the clamps that hold the cathode end of the Klystron into the lower ring. Remove the clamps that hold the lower ring into the shipping cradle. Store all bolts and clamps in the shipping container.

1.8 Lift the Klystron clear of the shipping container.

1.9 Remove protective materials from the cathode end of the Klystron if not done earlier. Wipe the gun insulator clean of any dust or dirt using clean lint free paper saturated in clean acetone, (or similar clean solvent that will leave no residue on the ceramic).

1.10 Remove the protective cover on the R.F. input connector if the Klystron is to be immediately installed into the electromagnet; otherwise, leave it in place until installation is imminent.

2.0 INSTALLATION OF X-RAY SHIELD ONTO ELECTRO MAGNET

(Refer to parts list, Litton Dwg No. 433467, which is a part of this document.)

2.1 Check to be sure that the 14 3/8 inch diameter O-ring is installed into the groove in the electromagnet (see drawing 373160).

2.2 Install the left and right skirt shields, M5045-4 and M5045-5, onto the electromagnet.

2.2.1 The skirt shields can be secured in place by installing the clamp, P.N. 433472. The use of the clamp is not mandatory but is recommended.

2.3 Install the output waveguide bottom shield M5045-10 onto the electromagnet platform. The adjusting screws on the platform should be backed out to flush, so that the shield rests on the platform, not the screws. Slide the bottom shield against the skirt shields.

2.4 Set the lower half of the window shield, M5048-8, onto the "crescent" shaped support of the electromagnet platform. Slide it toward the electromagnet as far as it will go. It may be necessary to adjust the bottom shield height to provide clearance.

2.5 The remaining parts of the X-Ray shield will be installed after the Klystron is installed into the electromagnet.

3.0 Installation of Klystron into Electromagnet

Note: Litton drawing number 373160 ("KLYSTRON/FOCUS COIL APPLICATION") shows the Klystron installed into the electromagnet and the X-Ray shielding installed, and forms a part of this document.

3.1 Check to be sure that the 14 3/8 in. diameter O-ring is installed into the groove in the electromagnet (See Dwg.373160) before attempting to install the Klystron.

3.2 Remove the protective cap from the R.F. input connector.

3.2.1 Disconnect the Ion pump power supply from the Ion pump, (if it has been previously connected).

> WARNING
> THE ION PUMP POWER SUPPLY IS CAPABLE OF DELIVERING OVER 3000 VOLTS UNDER OPEN CIRCUIT CONDITIONS. DO NOT ALLOW CABLE TO BECOME DAMAGED, AND DO NOT HANDLE IT WITH THE VOLTAGE TURNED ON.

3.3 Attach a hoisting bridle to the two Klystron eyebolts and to an overhead crane. Note: It is recommended that the bridle consist of a spreader bar with a centered loop or eye bolt to which the hook of an overhead crane will attach. The spreader bar is to support two hooks on 21 inch centers. These hooks must fit a 1-1/4 inch I.D. eye bolt and be suspended at least 17 inches, at their lifting surfaces, from the spreader bar. This bridle assembly must be capable of safely lifting at least 1000 lbs. (The Klystron weighs approximately 800 lbs.)

3.4 Raise the Klystron, center it over the electromagnet, and carefully lower it into the electromagnet. Make sure that the output waveguide of the Klystron is aligned and approximately centered in the electromagnet slot.

3.4.1 If the socket assembly attached to the bottom of the electromagnet is visible, observe, as the gun end of the Klystron approaches the contact posts of the socket, that the posts, compress properly. The contact posts should be compressed approximately 3/4 inch by the fully seated Klystron.

3.4.2 As the lower Klystron pole piece nears seating on the electromagnet lower pole piece, within the final 2 inches, it may be necessary to "jostle" the Klystron and move it up and down slightly to get it completely seated. When the Klystron is seated correctly in the electromagnet, there should be a slight gap, approximately .06 inch, between the upper Klystron pole piece and the top of the electromagnet.

> **CAUTION**
>
> WHEN TUBE IS IN PLACE, THE OIL LEVEL IN THE PULSE TRANSFORMER TANK SHOULD BE AT LEAST TO THE HEIGHT INDICATED ON THE DRAWING.

3.5. Once the Klystron has been seated, examine the alignment of the r.f. input connector relative to the access hole in the electromagnet. It should be approximately centered.

3.5.1 If the r.f. input connector is rotationally misaligned, lift the Klystron very slightly just enough to permit turning the Klystron, and center the input connector in the electromagnet access hole. Lower the Klystron.

3.6 Remove the hoisting bridle.

4.0 **Installation of X-ray Shields, Cooling Hose, and R.F. Input Cable**
(Refer to parts list, Litton Dwg No. 433467, which is a part of this document.

4.1 Install the top skirt M5045-11 over the Klystron waveguide. Then install the cover, M5045-12 over the skirt shields.

4.2 It is recommended that an overhead crane or other lifting devise be used to install the large, flanged shields and lid. They weigh approximately 150 lbs each. A three hook lifting bridle is recommended, along the lines of the sketch in Figure 4.

4.3 Engage the three hooks of the lifting bridle in the three slots of the bottom flange of M5045-1 and tighten up the keeper belt to prevent the hooks from disengaging. The flare fittings on the inside of the shield must be pointing "up".

4.3.1 The following may be a useful technique for installing a wire mesh gasket: Place one of the wire mesh gaskets in the groove of the bottom flange of M5045-1. Tape it in position with masking tape several places. Have the tape extend beyond the outside and inside diameters of M5045-1 so that it can be easily grasped. Note: A single gasket is made up from three pieces of the provided wire mesh material. Take each piece and stretch it somewhat, lay the stretched pieces into a flange groove to insure enough length to make a complete gasket and then proceed as indicated.

4.3.2 Lift M5045-1 and lower it down around the Klystron collector. Guide the flare fittings past those on the collector. It will be necessary to position these fittings to permit connection of the insulated metal hoses from the collector. When the bottom flange is 1/32 in. from the Klystron pole piece, remove the pieces of masking tape used to hold the wire mesh gasket in place. Align the holes in the M5045-1 flange with those on the Klystron polepiece, and start to thread several 1/4-20 x 3/4 bolts with 1/4 in. flat washers in position. Then lower the M5045-1 completely onto the Klystron pole piece. Remove the lifting device.

4.3.3 Install a total of eight 1/4-20 x 3/4 bolts with 1/4 in. flat washers to secure M5045-1 to the pole piece.

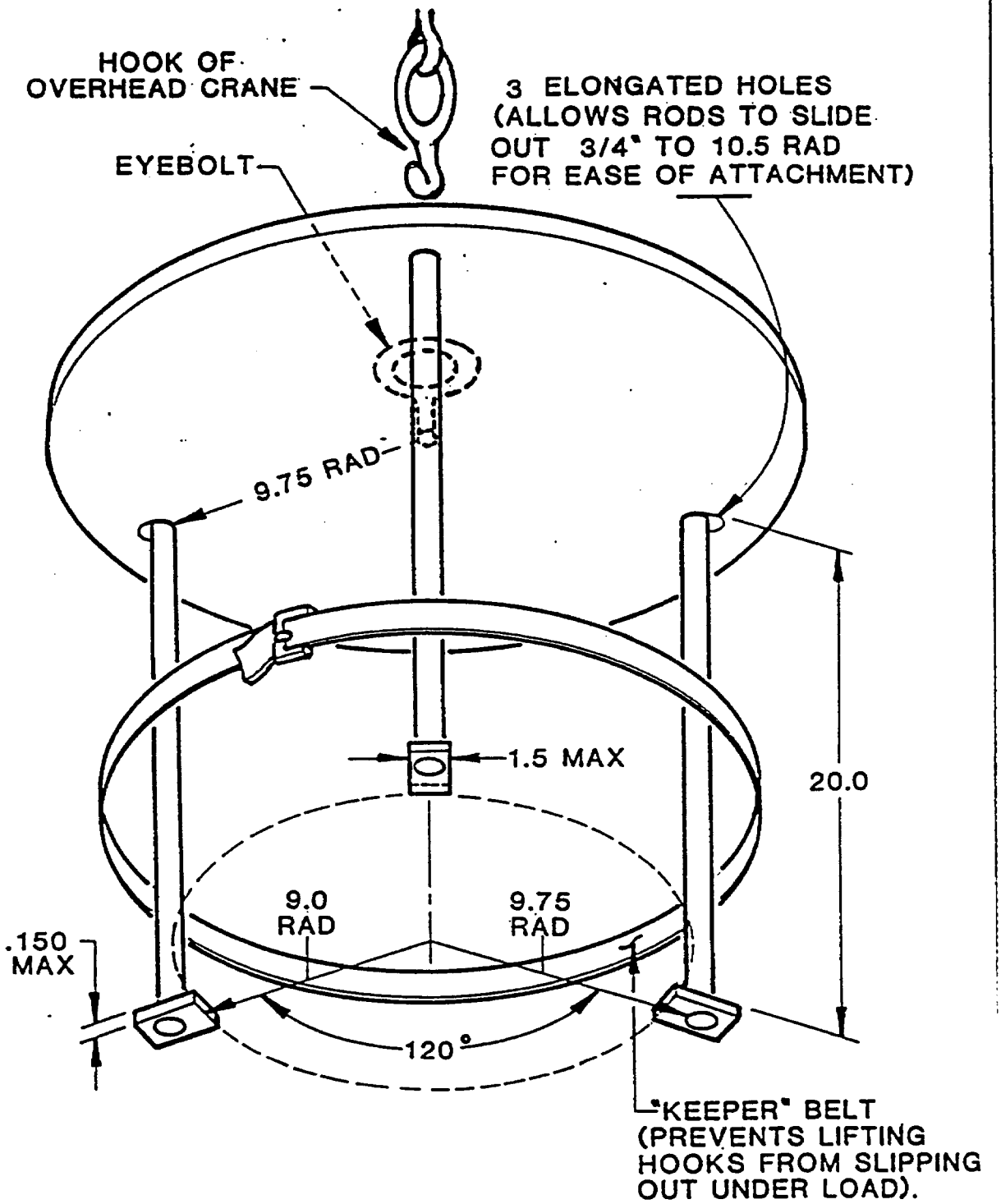

Note: Select construction materials to permit this device to be capable of lifting 500 lbs, safely.

FIGURE 4.0
THREE POINT LIFTING BRIDLE

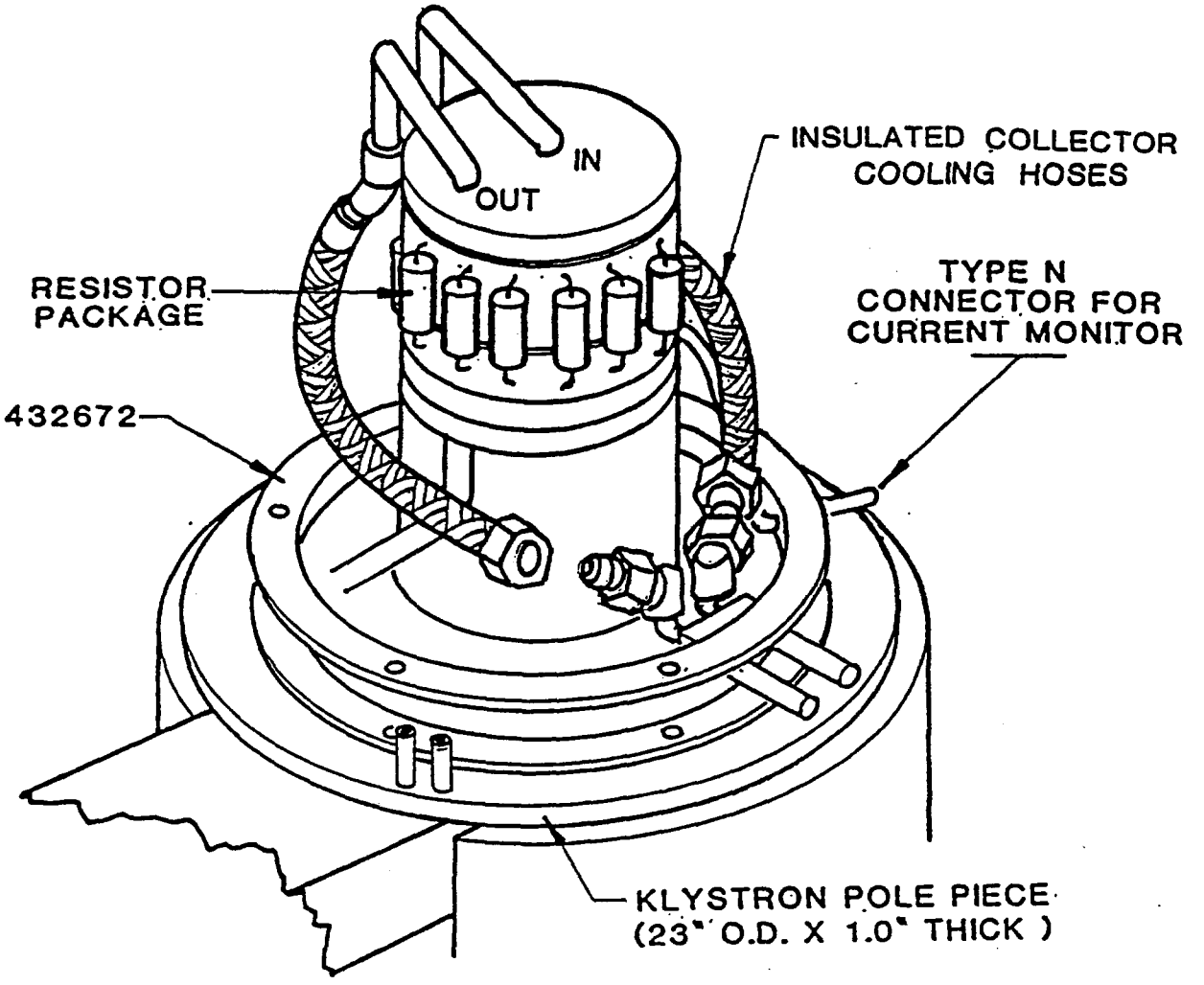

FIGURE 5.
COLLECTOR END OF KLYSTRON

4.4 The users resistor package should be installed at this time if the collector current and body current of the Klystron are to both be monitored (this is recommended).

4.4.1 The resistor package is mounted onto the Klystron collector. (see Figure 5) It is recommended that the value of the resistor package be in the neighborhood of 0.1 ohm, and be capable of passing the full Klystron beam current (approximately 150 amps peak). A type N coaxial cable feed-thru connector is provided in M5045-1 to access the resistor package.

4.5 Connect the metal hoses attached to the Klystron collector to the flare fittings on M5045-1. Connect the cooling system hoses to the external barbed pipes M5045-1. Turn the cooling water on and allow to run for several minutes. Check the hose connections for leaks. Close off the return line valve and allow the collector cooling lines to be pressurized at 50-60 PSI. (100 PSI IF AVAILABLE)

Observe that no coolant leaks exist. When complete, make sure return value is opened. Establish a coolant flow rate of at least 25GPM.

4.5.1 Note: It is important that the cooling system be capable of having the cooling lines drained of water and blown dry. When the Klystron is to be removed, the cooling lines must be blown dry to eliminate the likelihood of water being spilled into the pulse transformer tank. It is also important that no water be left in the Klystron if it is to be stored where it can be exposed to freezing temperatures.

4.5.1.1 The Klystron has many cooling passages and it is difficult to get all of the water out by blowing even hot air through them. Another method of removing the water, after blowing out as much as possible, is to close off the inlet (or outlet) and attach a mechanical vacuum pump to the other port and evacuate the cooling system in that manner.

4.6 Install the balance of the collector X-Ray shields. Place the M-5045-13 between the type N coax-feed-thru and the Klystron collector. Stack three M5045-2 units on top of the M5045-1 unit. A wire mesh gasket is to be installed between each of them. Bolt them together using the nuts, bolts and washers provided. Install the lid, M5045-3, with a wire mesh gasket between it and the M5045-2.

4.7 Install the "Horn shields", M5045-6 and, M5045-7.

4.7.1 Note: It is recommended that this step not be done until the system waveguide has been attached to the Klystron and secured in position.

4.7.2 Note: Do not apply a vertical force of more than 100 lbs. to the output waveguide flange.

4.8 Place the shields over the Klystron waveguide, meshing the overlapping joints. Snug them up against the skirt shields. The clamp, P.N. 433474, may be used to secure them in position.

4.9 Install the upper window shield, M5045-8. The clamp, P.N. 433473 may be used to secure it in position.

4.10 The R.F. Input shield, M5045-9 is placed in position around the R.F. Input cable when that connection is made.

4.11 Connect supply and return hoses to the Klystron body cooling barbed pipe fittings. Turn the cooling water on and allow to run for several minutes. Check the hose connections for leaks. Close off the return line valve and allow the body cooling lines to be pressurized at 50-60 psi (100 psi if available). Observe that no coolant leaks exist. When complete, make sure return valve is opened. Establish a coolant flow rate of at least 5 GPM.

4.11.1 See Note of 4.5.1.

4.12 Install the R.F. Input cable.

4.12.1 The R.F. Input connector of the Klystron is not easily accessed, as it is a part of the Klystron body and deep within the focus coil. A simple "wrench" (Litton P.N. 432304-JA) has been devised which can be affixed to the connector nut on a type N fitting and around the coaxial cable. This wrench provides a rigid member permitting the connector nut to be threaded onto the mating Klystron connector.

4.12.2 After the connection is made, the M5045-9 (see 3.9) is placed in position on the pulse transformer tank top, around the input coaxial cable.

5.0 Operation of the Klystron

WARNING

DO NOT ATTEMPT TO OPERATE THIS TUBE UNTIL IT HAS BEEN DETERMINED THAT ALL PRECAUTIONS HAVE BEEN TAKEN TO PROTECT PERSONNEL FROM ALL HAZARDS. PROTECTIVE DEVICES SUCH AS SHIELDS AND INTERLOCKING SWITCH CIRCUITS MUST BE IN OPERATION. REREAD AND COMPLY WITH ALL PRECAUTIONS AND PROCEDURES SPECIFIED IN THE "OPERATING HAZARDS" SECTION.

WARNING

HIGH VOLTAGE - VOLTAGES REQUIRED FOR OPERATION OF THIS TUBE ARE EXTREMELY DANGEROUS TO LIFE; EQUIPMENT MUST BE DESIGNED WITH PROTECTIVE INTERLOCK CIRCUITS TO MAKE PHYSICAL CONTACT WITH THESE VOLTAGES IMPOSSIBLE. SEE OPERATING HAZARDS SECTION.

5.1 Precautionary recommendations:

5.1.1 It is recommended that the high voltage insulation oil in the pulse transformer tank be maintained at a minimum temperature of 90°F to minimize the possibility of contamination of the oil by condensation of water vapor. It is recommended that the oil be at temperature for at least 24 hours before applying high voltage to the Klystron.

5.1.2 It is assumed that a line type modulator is used to provide the high voltage pulse to the Klystron. It is recommended that this equipment incorporate an over-current sensing circuit that will disconnect the power supply when tripped, as from an arc in the Klystron. The trip level should be set to 15%-25% above the operating current of the Klystron and should be fast enough to prevent the application of the next pulse after the event.

If a "crowbar" type of device is used to protect the Klystron and Modulator, it should be set to limit the energy in an Arc to less than 30 Joules.

5.1.3 It is recommended that interlocks with settable trip levels be provided for ion pump current, electromagnet currents, Klystron coolant flow, Klystron filament current. These interlocks should, when activated, remove both R.F. and Beam power.

5.1.4 If it is considered necessary to use an insulating gas in the output waveguide, it is recommended that dry Nitrogen or dry Air be used. Do not exceed 30 psig.

5.5.2.1 Increasing the duty factor may produce some arcing. Again, proceed as in 5.5.1.

5.6 When operation at full beam duty has been achieved apply R.F. input power at approximately one third full R.F. duty. Monitor the Ion pump current and gradually increase the R.F. input power until full peak drive power and output power per the data sheet has been reached. Then increase the duty factor until full duty and output power have been achieved.

WARNING

X-RAYS

THIS DEVICE PRODUCES DANGEROUS X RADIATION DURING OPERATION. THE EQUIPMENT IN WHICH THIS DEVICE IS USED MUST PROVIDE ADEQUATE X-RAY SHIELDING AROUND THE DEVICE, INCLUDING THE GUN REGION, FOR THE PROTECTION OF PERSONNEL. BOTH DEVICE AND SYSTEM MUST NEVER BE ALTERED IN ANY WAY WHICH MIGHT DECREASE SHIELDING. RADIATION LEVELS SHOULD BE CHECKED PERIODICALLY TO ENSURE SAFE OPERATING CONDITIONS AND COMPLIANCE WITH STATUTORY AND REGULATORY REQUIREMENTS. NEVER APPLY BEAM VOLTAGES WITHOUT HAVING X-RAY SHIELDING IN PLACE. X-RAYS ARE DEADLY AND CANNOT BE DETECTED EXCEPT WITH SPECIAL EQUIPMENT. SERIOUS EXPOSURE MAY OCCUR WITHOUT PERSONNEL BEING AWARE. SERIOUS PERSONAL INJURY OR DEATH MAY OCCUR AT SOME LATER DATE AS A CONSEQUENCE.

WARNING

RF RADIATION

THIS DEVICE IS DESIGNATED TO PRODUCE HIGH ENERGY RF RADIATION. EVEN LOW LEVELS OF RF RADIATION CAN BE HAZARDOUS TO HUMAN HEALTH. PRECAUTIONS MUST BE TAKEN TO PREVENT EXPOSURE OF PERSONNEL TO THE STRONG RF FIELDS GENERATED BY THIS DEVICE. RF RADIATION DUE TO LEAKAGE AT THE WAVEGUIDE FLANGE SHOULD BE PREVENTED BY MAKING GOOD RF OUTPUT CONNECTIONS. NEVER OPERATE THIS TUBE WITHOUT HAVING AN APPROPRIATE ENERGY ABSORBING LOAD ATTACHED. NEVER LOOK INTO AN OPEN WAVEGUIDE WHILE THIS DEVICE IS ENERGIZED.

5.6.1 It may be necessary to make slight adjustments to the focus coil currents to achieve full power output. It is recommended that any initial adjustments be made at low duty. The Klystron will most likely be very responsive to coil #1 and coil #6 adjustments. Be cautious. As the duty level is increased additional adjustment may be necessary.

5.6.1.1 Application of R.F. input power may produce some arcing and/or Ion pump current increase. Proceed as in 5.5.1.

5.6.2 It is recommended that the Klystron be operated at full duty and output power for at least 20 hours as a "burn-in" operation.

5.7 Once the Klystron has been burned in, it should be possible to bring it up to full operating level directly; that is, no gradual or low duty preamble to full duty operation, with the exception that a minimum of 45 minutes at full filament power must elapse before any high voltage application. (If, when the Klystron is not operating, the heater power is maintained at approximately 2/3 full power, the warm-up time can be reduced to approximately 15 minutes).

RJH351

4 3 433467 2 1

REVISIONS					
REV	DESCRIPTION		ECO	DATE	APPROVED
B	REDRAWN, REVISED	KS	41668	6-3-91	RHansen
C	ADDED M5045-13	TK	42274	8/21/91	RHansen

DWG NO 433467

DESCRIPTION	LITTON PART #	QTY	LABELING
SHIELD/FEED THRU	0432672	1	M5045-1
SHIELD	0432674	3	M5045-2
SHIELD LID	0432776	1	M5045-3
LEFT SKIRT	0432683 0435393	1	M5045-4
RIGHT SKIRT	0432684 0435392	1	M5045-5
LEFT HORN SHIELD	0432688	1	M5045-6
RIGHT HORN SHIELD	0432689	1	M5045-7
WINDOW SHIELD	0432777	1	M5045-8
INPUT SHIELD	0432690	1	M5045-9
HOSE	0372025	2	—
GASKET, WIRE MESH	0432751	5	—
SC, 1/4-20 X 1-1/4	0041660-C	32	—
SC, 1/4-20 X 3/4	0041657-C	8	—
NUT, 1/4-20	0041495-C	32	—
WASHER, 1/4 FLAT	0041705-C	72	—
CLAMP, SKIRT SHIELD	0433472	1	—
CLAMP, WINDOW SHIELD	0433473	1	—
CLAMP, HORN SHIELD	0433474	1	—
CLAMP, HOSE	0372024	4	
BASE PLATE, HORN SHIELD	0435506	1	M5045-10
TOP SKIRT	0435510	1	M5045-11
COVER ASSEMBLY	0435511	1	M5045-12
FEED-THRU SHIELD	0436138	1	M5045-13

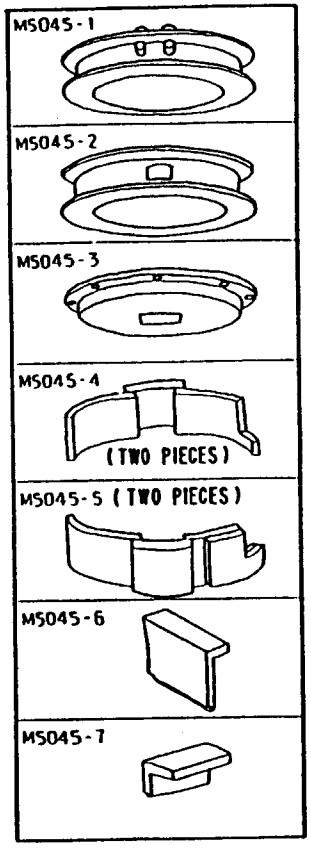

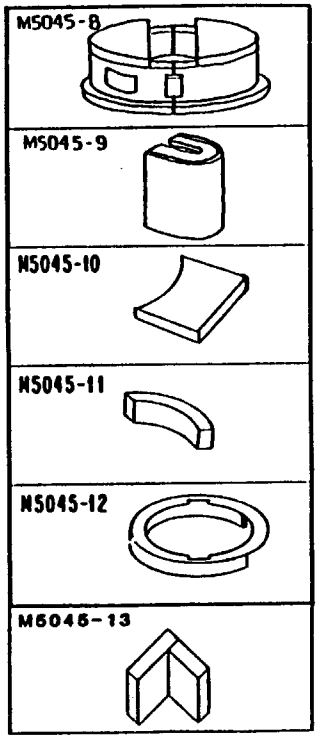

A

INTERPRET IAW DOD-STD-100
DO NOT SCALE DRAWING
UNLESS OTHERWISE SPECIFIED DIMENSIONS ARE IN INCHES

TOLERANCES ARE
DEC ± .000 FRAC ± 1/64
.XX ± .000 ANGULAR ± 1°
.XXX ± .000 SURF √

FOR MFR MATERIAL:

DRAWN K SUNAHARA DATE 6-3-91
MFG APPROVED DATE
ENG APPROVED RHansen DATE 6-7-91
ENG CODE 34-106-000

Litton
Electron Devices

TITLE X-RAY SHIELD KIT PARTS LIST

SIZE	CAGE CODE	DWG NO	REV
B	80080	433467	C

SCALE — DIST CODE 34 E (4) SHEET 1 OF 1

DISTINCH POST REPRODUCTION NO. 144288

432304-JA

THIS DOCUMENT CONTAINS INFORMATION PROPRIETARY TO LITTON SYSTEMS INC. ANY REPRODUCTION DISCLOSURE OR USE OF THIS DOCUMENT IS EXPRESSLY PROHIBITED EXCEPT AS THE ELECTRON DEVICES DIVISION OF LITTON SYSTEMS INC. MAY OTHERWISE AGREE IN WRITING OR CONTRACT.

REVISIONS

REV	DESCRIPTION	ECO	DATE	APPROVED
–	RELEASED / ECO-38508	–	–	–

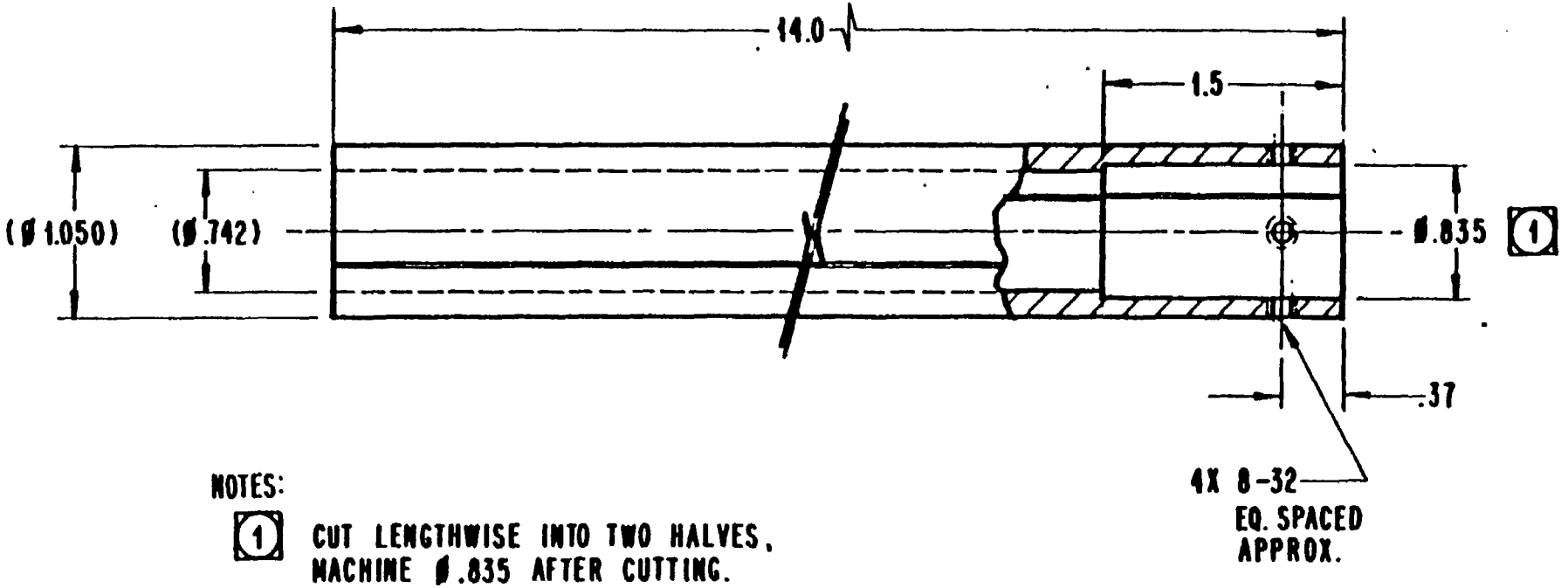

NOTES:

1. CUT LENGTHWISE INTO TWO HALVES, MACHINE Ø .835 AFTER CUTTING.

INTERPRET IAW DOD-STD-100
DO NOT SCALE DRAWING
UNLESS OTHERWISE SPECIFIED DIMENSIONS ARE IN INCHES

TOLERANCES ARE:
DEC. .X ± .060 FRAC. ± 1/64
.XX ± .020 ANGULAR ± 1°
.XXX ± .006 SURF √

EDD MRP MATERIAL:
304L ST. STEEL TUBE
1.050 O.D. X .154 W
1550430-324

DRAWN	K. SUNAHARA	DATE 7-31-90
MFG. APPROVED		DATE
ENG APPROVED	R Harrison	DATE 8/13/90
		8-18-90
ENG CODE: 34-625-000		

Litton
Electron Devices

TITLE
R.F. INPUT CONNECTOR WRENCH

SIZE	CAGE CODE	DWG NO.	REV
A	80080	432304-JA	

SCALE 1/1 DIST CODE 34 E 1 SHEET

DIETERICH P REORDER NO. 134603

OPERATING HAZARDS
READ THIS AND TAKE ALL SAFETY PRECAUTIONS

The user of the device and the equipment manufacturer are responsible for proper use of the product and establishing safe operating practices. Make sure that all appropriate safeguards for the protection of personnel and property are taken. Litton does not assume responsibility for after sale operating and safety practices.

Anyone who works with or is exposed to microwave tubes or the equipment which uses them, must be advised against carelessness and casual operating practices and must take precautions to protect themselves against possible injury or death.

OPERATING INSTRUCTIONS

Each device delivered by Litton has an Acceptance Test Data sheet or similar document accompanying it. Operating Instructions may be provided. If instructions are not provided and the user has questions, please contact Litton. **All documents should be read carefully.** The Acceptance Test Data sheet is a record of the test results when the device was operated at the factory. The Operating Instructions will describe how to operate the device and will give guidelines for the unpacking and installation of the device. Keep in mind that careless operation of this device can result in poor performance, possible damage, and perhaps serious injury.

Address written questions about the operation of this device to the Sales Manager, Litton Electron Devices, at the address listed at the end of this document.

WARNING-SERIOUS HAZARDS EXIST IN THE OPERATION OF MICROWAVE TUBES

The following is a list of some of the hazards that can be encountered when operating microwave tubes and associated equipment. When safe operating practices and precautions are not observed, serious harm and/or death to people may result. **Be aware and take note of the following:**

a. HIGH VOLTAGE- **Normal operating voltages may be lethal.**

b. RF RADIATION- **RF (radio frequency) radiation exposure can result in serious injury, possibly resulting in blindness or death. Cardiac pacemakers may be affected.**

c. X-RAY RADIATION- **High voltage electron tubes can produce dangerous and possibly fatal x-rays.**

(does not apply to L-8959)

d. BERYLLIUM OXIDE POISONING- **Some electron tubes are constucted using beryllium oxide ceramic (BeO). The dust and fumes from this ceramic are highly toxic and actions that might generate them must be avoided. Exposure can result in serious injury or death.**

e. HOT SURFACES- **High power microwave devices generate heat and the surfaces of these devices can reach temperatures of several hundred degrees celsius, which can result in serious burns.**

f. HOT WATER- **Many electron devices use water or other liquids for cooling. These liquids can reach scalding temperatures. Touching or rupture of the cooling system can cause serious burns.**

(does not apply to Linac-Upgra

g. CORROSIVE AND POISONOUS COMPOUNDS- **Some microwave devices use an insulating gas in the external waveguide connected to the device. Some of these gasses break down to form very corrosive and toxic compounds when subjected to arcing.**

h. IMPLOSION HAZARD- **The ceramic or glass members of vacuum devices can shatter on impact or crack, possibly resulting in injury from flying particles or from beryllia (BeO) dust or fumes.**

i. WEIGHT- **Many electron devices, especially microwave tubes, are much heavier than they appear and may cause injury if appropriate lifting devices are not used.**

Additional information regarding specific electron device hazards :

HIGH VOLTAGE

The voltages used to operate many electron devices can be high enough to deliver fatal electric shocks. The equipment utilizing these devices must be designed to prevent personal contact with high voltage. Prominent hazard warnings should be permanently attached to equipment used to operate such devices. When it is necessary for direct access to the device, always break the primary circuits of the power supply and discharge the high voltage capacitors.

RF RADIATION

Do not permit people in the vicinity of open energized waveguides or energized antennas. Make every attempt to minimize the exposure of people to rf radiation. The effects of long term exposure to low level rf radiation are not known with any certainty, but the current standard is that the level of exposure should be limited to 1 mW/cm2 (one milliwatt per square centimeter).

Be aware that rf radiation can affect cardiac pacemakers and other electronic medical devices.

DEVICES THAT GENERATE RF ENERGY MUST HAVE ALL OF THEIR INPUT AND OUTPUT RF CONNECTIONS RF LEAKPROOF. USE THE APPROPRIATE RF GASKETS AT ALL CONNECTING FLANGES. MONITOR THE DEVICE AND ITS ASSOCIATED EQUIPMENT FOR RF RADIATION LEAKAGE AT REGULAR

INTERVALS. DO NOT OPERATE RF GENERATING DEVICES WITHOUT A PROPERLY MATCHED ENERGY ABSORBING LOAD ATTACHED TO IT. WHEN THE DEVICE IS ENERGIZED, NEVER LOOK INTO OR EXPOSE ANY PART OF THE BODY TO AN ANTENNA OR OPEN WAVEGUIDE.

X-RAY RADIATION

Electron devices that operate with voltages above approximately 15 kilovolts will produce x-ray radiation which becomes progressively more dangerous as the voltage increases. The user of these devices must be aware of this and make provision for adequate shielding.With electron tubes, the collector and cathode regions are often major x-ray producers and need to be checked, as well as the high voltage equipment used to operate them.Check the level of x-ray radiation. DO NOT OPERATE HIGH VOLTAGE ELECTRON DEVICES WITHOUT ADEQUATE X-RAY SHIELDING IN PLACE. IT IS POSSIBLE FOR THE X-RAY EMISSIONS FROM THESE DEVICES TO CHANGE WITH TIME SO MONITOR THEM AFTER ANY SERVICING AND AT REGULAR INTERVALS.

BERYLLIUM OXIDE CERAMICS (BERYLLIA) (BeO) - DO NOT BREATH DUST OR FUMES

(does not apply to L-5859)

Some electron devices use BeO in their construction, especially microwave tubes. (They are to be so labeled). Generally, BeO will be used for the rf output window or the electron gun insulator. Do not perform any operations on devices that contain Beryllia that may produce dust or fumes,such as grinding, or sand blasting or acid cleaning. BERYLLIUM OXIDE DUST AND FUMES ARE HIGHLY TOXIC AND BREATHING THEM CAN RESULT IN SERIOUS INJURY OR DEATH. Handle devices containing BeO carefully. If you suspect that the rf output window or gun insulator are broken, seal the broken region with tape to prevent any pieces from escaping. Every attempt is made to label devices using BeO. However, **be aware that warning labels may have obliterated or removed.** You are urged to contact Litton Electron Devices before performing any work on ceramics in any Litton electron device.

Be aware that there are strict regulations regarding the disposal of any toxic material such as Beryllia. Anyone involved with the salvage or disposal of devices containing BeO must be made aware of the hazards involved and the need for care and observance of safety precautions.

CORROSIVE AND POISONOUS COMPOUNDS

(does not apply to Linac-upgrade system)

Sometimes electron devices are operated into systems containing an insulating gas or gasses.If arcing occurs in the devices containing the gas, the gas may decompose and combine with impurities, such as air and water, to form highly toxic or corrosive compounds. Some examples are Freon gas which may form PHOSGENE which is lethal, and may SF6 (sulfur hexafluoride) which form very toxic and corrosive sulfur or fluorene compounds. Should breakdown happen in these atmospheres, AVOID BREATHING ANY FUMES OR TOUCHING ANY LIQUIDS WHICH DEVELOP. VENTILATE THE

REGION. TAKE THE PRECAUTIONS COMMENSURATE WITH TOXIC AND CORROSIVE SUBSTANCES.

IMPLOSION

Many electron devices are vacuum devices which use glass or ceramic as part of the vacuum envelope. This glass or ceramic can shatter inward (implode) if hit or subjected to excessive shock. Flying debris could result in injury. Toxic dust or fumes could result if such debris is made of BeO ceramic.

HOT WATER

Many electron devices use water or other liquids to provide cooling during operation. The liquid can reach high temperatures (boiling or above) and may be under pressure as well (many electron tubes typically require pressures in the neighborhood of 100psi). Scalding or other burns could result from the rupture of the cooling lines. Take precautions to prevent such rupture and contact with cooling lines or leaking coolant.

HOT SURFACES

Some electron devices are air or conduction cooled. The external surfaces of these devices can become as hot as 300°C. These surfaces may remain hot for a considerable time after the device is turned off. Prevent burns. Avoid contact with these surfaces until a reasonable cool-down period has elapsed.

WEIGHT

Many electron devices, microwave electron tubes in particular, are manufactured with much of their volume being solid, or near solid copper, steel and other dense, heavy materials. They will often be much heavier than they appear. Avoid injury to personnel. Use correct lifting techniques. Incorrect handling of these devices can result in serious bodily injury and/or equipment damage. Lift these devices with caution, using appropriate equipment, at the designated lifting points.