FERMILAB-Proposal-0567

ADDENDUM TO FNAL EXPERIMENT 302.

# SEARCH FOR CHARM PRODUCTION IN 200 GEV/c HADRON INTERACTIONS.

R. Cester, V.L. Fitch, R.C. Webb, M.S. Witherell
Princeton University

R. Turlay
Saclay

M. May
Brookhaven National Laboratory

Spokesperson: Michael S. Witherell

11 pgs.

## Introduction

We wish to extend the utilization of the two arm spectrometer of experiment 302, which will be set up in the downstream end of Proton West, by performing a high sensitivity charm search. This will require the addition to the original design of a third spectrometer arm close to the target region and downstream $\mu$ filters in each of the two arms.

The basic limitation in searching for charmed objects produced in hadronic channels has been the high background level from conventional strong interaction sources. We propose to enhance the signal to background ratio by capitalizing on the existence of charm levels ($D^*$,D; $\Sigma_c$,$\Lambda_c$) with mass separation only slightly larger than a pion mass.

As an example we discuss in detail the search for $D^{*\pm}$. The charmed vector mesons $D^{*\pm}$ have been detected at SPEAR[1)] and are seen to decay predominantly to $D^o\pi^\pm$ final states with a measured Q value of $5.7 \pm 0.5$ MeV. In the limit of zero Q value the pion has the same velocity as the $D^o$ in the laboratory. A symmetric double arm spectrometer, as that of E-302, selects, through their two body final states, $D^o$'s within a restricted momentum interval. Thus the pion accompanying the $D^o$'s from $D^*$ decay are well collimated and have a central momentum of $\frac{m_\pi}{m_D} \times p_D$. In the proposed experiment we will require a pion in the appropriate kinematic region as a constraint in the selection of the events, both at the trigger and analysis level.

We have performed a similar experiment at BNL using 10.5 GeV/c pions. We measured $\sigma B = 7 \pm 17$ nb for the reaction

$$\begin{array}{l} \pi^- + p \rightarrow D^{*-} + \Lambda_c^+ \\ \qquad\qquad\quad \hookrightarrow \pi^- + \bar{D}^o \\ \qquad\qquad\qquad\qquad \hookrightarrow K^+ + \pi^- \end{array} \qquad (1)$$

In the BNL experiment the requirement of the extra pion in the trigger reduced the trigger rate by a factor of 30. Reconstruction reduced the background another factor of 6 for a total reduction in background of 180. Superior momentum analysis of the soft pion, proposed in this experiment, should permit additional off-line discrimination against background of another factor of 5, leading to an overall background suppression of 1000. To make the extrapolation from BNL to Fermilab energies we have assumed that the production of background follows the usual scaling laws.

Countering the substantial decrease in background is a suppression in signal which arises from losses in the competing $D^*$ decay channels of $\gamma + D^-$ and $\pi^o + D^-$. With the Q-value at 5.7 MeV, this loss should not exceed a factor of 2.[2)] With the background reduced by almost $\sim 1000$ and the signal reduced by $\sim 2$, the net gain in the ratio of signal to background is expected to be about 500. Of course, here we measure $\sigma$ for the production of $D^*$ as opposed to $D^o$. The ratio of the cross sections for $D^*$ and $D^o$ production is large at SPEAR for reasons not yet understood. One cannot expect the same mechanisms to hold in hadron production. However, given the small mass difference between D's and $D^*$'s, it is reasonable to assume that they will be produced in comparable amounts at Fermilab energies.

This experiment requires the addition of one magnet to the E-302 setup in the target region of the experiment to analyze the soft pions. Assuming $10^7$ interactions/pulse we can achieve a sensitivity of 1.5 nanobarns in $\sigma B$ (6 nb at the $4\sigma$ level) for $D^{*\pm}$ production in 400 hours of data taking.

The same technique allows the concurrent study of the production of the charmed baryon detected through the following decay chain:

$$\Sigma_c \to \Lambda_c + \pi_s$$
$$\quad \hookrightarrow \Lambda + \pi_h$$
$$\quad\quad \hookrightarrow P + \pi_s$$

with P and $\pi_h$ in the two arms and the slow pions ($\pi_s$) in the third arm. In this case both the detection efficiency and the background are somewhat lower leading to an estimated error of 2.5 nb for $\sigma B$ (10 nb for a $4\sigma$ effect).

We finally point out that a beam intensity as low as 5 $10^8$ particles ($P,\pi$) per pulse is adequate for this experiment, making possible for it to be run at an early stage of the Proton West area beam development.

The Spectrometer

The spectrometer configuration proposed for E-302 with the additional magnet-chamber system for the charm search is shown in Fig. 1 (a and b). Figure 2 shows the set-up in the planned location at the downstream end of the new experimental hall in Proton West.

The double arm spectrometer will use two BM109 magnets with the gap opened to 14". The wider aperture will increase the acceptance for two body final states by a factor of four. Moreover it will substantially increase the sensitivity to other interesting decay modes such as those with $\phi$'s in the final state. With the wide gap, the magnet can be operated at a maximum $p_\perp$ of $\sim$ 700 MeV/c. Correspondingly the error in the mass measurement at 1.86 GeV is expected to be $\sigma_m$ = 5 MeV.

Particle identification will be achieved with three Cerenkov counters per arm, two upstream and one downstream of the BM109 magnets. The characteristics and operational modes of the counters are summarized in Table I. Counters 1 and 3 are standard threshold counters, while Counter 2 is operated in an hybrid differential/threshold mode. It will be built according to a new scheme developed by our group[3)] which makes

possible the utilization of a differential counter in a comparatively large phase space beam.

The third spectrometer magnet is a large aperture one located about two meters downstream of the target along with a set of trigger hodoscopes and MWPC's. It will be run with a $p_\perp$ of 400 MeV/c. (A possible candidate for this magnet exists at BNL (Henry Higgins) and is shown in Fig. 1.) The MWPC's for the third arm are designed to accept all slow pions from the cascade decay of the $D^{*\pm}$ where $D^o \rightarrow \pi K$ enters the double arm spectrometer. Even so their size is quite small (.5 m x 1. m active area). With a 3-4 mm wire spacing we will achieve a resolution in the Q value of $\sigma_Q = 1$ MeV.

It will be desirable to collimate the third arm magnet aperture to inhibit direct viewing of the chambers from the target. A carefully designed magnet/collimator system in the target area will also help in the suppression of backgrounds leading to systematic errors in the C-conjugation part of the experiment.

Finally we plan to add a $\mu$ filter at the end of the two arms. In the 400 hours of the charm cross-section measurement $\sim 500\ \Psi \rightarrow \mu\mu$ decays will be collected which will provide the experiment with a valuable calibration signal.

Beam, Trigger Rate and Cross Section Estimates

The maximum useful luminosity is set by the ability of the chambers closest to the target to operate in a high intensity environment. Based on the experience of the Fermilab-Michigan-Purdue group a luminosity of $10^7$ interactions/pulse at 400 GeV/c is acceptable. We can operate with a pion or proton beam of $5 \times 10^8 - 10^{10}$ particles/pulse, preferably at a momentum of 200 GeV/c. The beryllium target will be of a length appropriate to yield the required interaction rate. The transverse dimensions of the beam are not critical, a 1 $cm^2$ beam spot would be quite adequate.

Based on the data of Ref. 4 we expect $\sim$ 800 di-hadron events/$10^7$ interacting particles with both laboratory momenta greater than 7 GeV/c ($\sim$ 1/2 of the $D^o$ momentum). From our BNL experiment and scaling the particle production cross section to FNAL energies we estimate that a X30 suppression factor can be achieved in the trigger rate through the extra requirement of the slow pion. This brings the trigger rate down to $\sim 30/10^7$ interactions.

The sensitivity achieved in 400 hours of running at $10^7$ interactions/pulse is 10 events/nb. For this calculation we have folded in the spectrometer acceptance of $6.5 \times 10^{-4}$ at the $D^o$ mass, determined by a Monte Carlo simulation which assumes a production cross section:

$$\frac{d\sigma}{d\,x\,dp_\perp} = (1-|x|)^3 \; p_\perp \, e^{-1.5\,p_\perp} \, .$$

Based on the data of Ref. 4, the background level in the $D^o$ mass region is 25 $\mu$b in a 10 MeV ($2\sigma_m$) band. We estimate that the requirement that slow pion and $D^o$ reconstruct to give the $D^*$ mass will suppress the background by a factor X1000 to the 25 nb level. Correspondingly we will reach a sensitivity to $\sigma B$ of $\sim$ 6 nb for a $4\sigma$ effect. An analogous calculation gives $\sim$ 10 nb for the $\Sigma_c$ production case.

Given the current interest and importance of these experimental results we suggest prompt scheduling. We could begin installation in the spring of 1978 in anticipation that the first beam will become available in the high intensity Proton West area in summer 1978. We request, for this part of the experiment, 100 hours of beam for tune up and testing and 400 hours at 200 GeV/c for data taking.

## References


1) G. J. Feldman et al., Phys. Rev. Lett. 38, 1313 (1977).

2) From SPEAR it is known that $\Gamma(D^{*o} \rightarrow \gamma + D^{o})/\Gamma(D^{*o} \rightarrow \text{all})$ is about 0.4. The Q value for $D^{*o} \rightarrow \pi^{o} + D^{o}$ is 2 to 4 MeV.

3) V. Fitch, Internal Report, Princeton University.

4) D. Bintinger et al., Phys. Rev. Lett. 37, 732 (1976).

TABLE I

| Counter # | Radiator | Pressure (Atm) | n-1 | Length | Mode | p interval (GeV) |
|---|---|---|---|---|---|---|
| 1 | $C_3H_8$ | 3.5 | $3.5\ 10^{-3}$ | 5' | Thresh. K/P | 6 - 11 |
| 2 | Freon 12 | 1 | $10^{-3}$ | 4' | Thresh. K/P | 11 - 22 |
| | | | | | Differential K/P | 22 - 40 |
| | | | | | Thresh. $\pi$/K | 3.5 - 11 |
| | | | | | Differential $\pi$/K | 11 - 20 |
| 3 | $N_2$ | 1/3 | $.710^{-4}$ | 13' | Thresh. $\pi$/K | 20 - 50 |

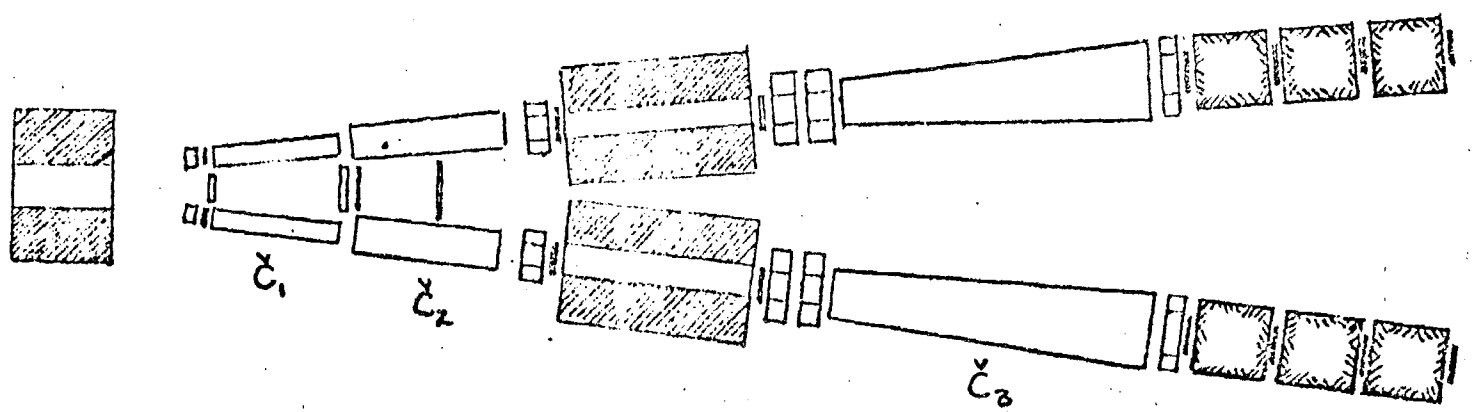


Fig 1, a

10'

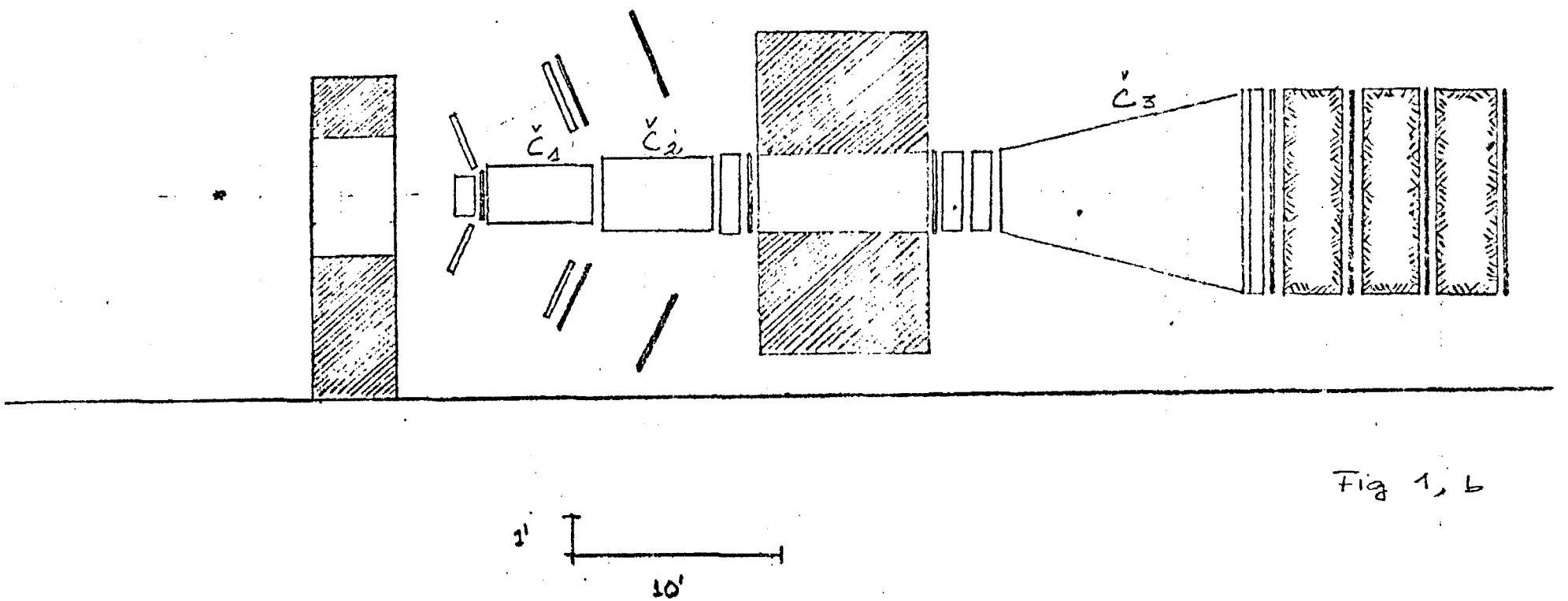


Fig 1, b

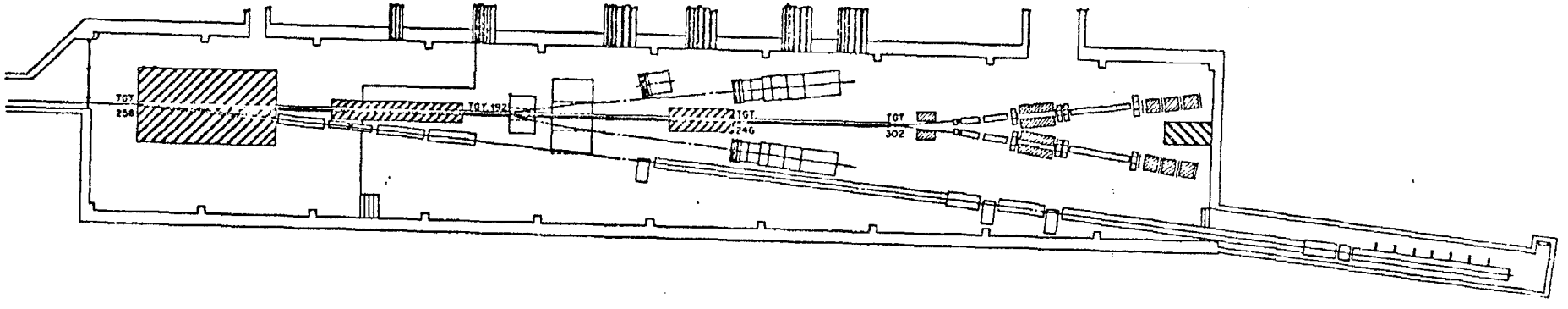


Fig. 2