MASSACHUSETTS INSTITUTE OF TECHNOLOGY
LABORATORY FOR NUCLEAR SCIENCE
CAMBRIDGE, MASSACHUSETTS 02139

Room 24-036
(617)253-2396

June 28, 1990

Dr. Taiji Yamanouchi
MS-105
Fermi National Accelerator Laboratory
P.O. Box 500
Batavia, IL 60510

Dear Taiji,

This letter is the follow up to my telephone call. The enclosed proposal outlines our desire to do some tests on a prototype precision muon detector for eventual use -- in a much expanded form naturally -- at the super collider.

As you can gather we plan to operate in a parasitic mode on the E665 muon beam but behind the experiment. We have begun tests on it here at M.I.T., but want to check it out in a more "real" world approaching the Tev range.

At the present time I am acting as contact person for the sub-group of the SSC EMPACT group. During the tests the main person on the spot will be Dr. Andrey Korytov of Dubna who will be arriving this fall for this purpose. He will be supported by us but I hope he will enjoy the privileges of a visiting physicist at Fermilab.

I am in contact with Don Geesaman of E665 and with Henry Lubatti to make sure we have no interferences and it appears we can work harmoniously together.

I hope to hear from you soon and can get a go-ahead on arranging details of our residence in the E665 area. It is my expectation that we would cover the expenses of any services we would require from Fermilab.

Regards,

Louis S. Osborne
Professor of Physics

LSO:sbf

cc: M. Marx, SUNY, Stonybrook
A. Korytov, Dubna
G. Mitselmacher, Dubna
R. Weinstein, U. of Houston
T. Marshall, U. of Indiana
L. Rosenson, MIT
H. Kendall, MIT
F. Eppling, MIT
F. Gilman, SSC

EMPACT MUON TELESCOPE EVALUATION AT FERMILAB

A. Korytov
Joint Institute for Nuclear Research
Dubna, U.S.S.R

K. Lau, B. Mayes, L. Pinsky, R. Weinstein
Institute for Beam Particle Dynamics
University of Houston
Houston, Texas 77204 – 5506

T. R. Marshall
Indiana University
Bloomington, Indiana 47405

J.I. Friedman, E. Hafen, P. Haridas, H.W. Kendall,
T. Lyons, L.S. Osborne, I. Pless, L. Rosenson, R. Verdier
Massachusetts Institute of Technology
Cambridge, Massachusetts 02139

CONTACT PERSON: L.S. Osborne

Bitnet	OSBORNE@MITLNS
Telephone	(617)253-2396
FAX	(617)253-1755

The muon measuring subsystem envisaged for the EMPACT detector at the SSC requires precision muon momentum measurements. Determining the ultimate accuracy of this subsystem requires measurements of high energy real muons, in the pair production region. We are currently building and testing at M.I.T. a telescope of aluminum extrusion streamer chambers. We propose bringing this telescope to Fermilab for evaluation in the E-665 Muon beam. We will study performance dependence on chamber gas, delta ray filters, gas pressure, etc. We will test their performance in drift mode, with pick-up strip detection, and in high pressure mode.

Contents

1	The EMPACT Detector	1
2	Muon Detector Design Considerations	2
2.1	Specifications	2
2.2	Implementation	3
2.3	Prototype	3
3	Prototype Tests at Fermilab	4
3.1	Test Runs	5
3.2	Laboratory Responsibilities	5
3.2.1.	M.I.T.	5
3.2.2.	Fermilab	5
3.3	Liaison	6

1. The EMPACT Detector

One of the SSC detector candidates is EMPACT, described in some detail elsewhere[1,2]. A distinguishing characteristic of EMPACT is that it does not have a central magnetic field. This feature emphasizes high accuracy in charged lepton measurements and may improve jet calorimetry and minimize radiation in the inner tracker from recirculating tracks.

A schematic of EMPACT is shown in Fig. 1. Muon momentum is measured outside the main calorimeter with 3 toroidal magnets and associated muon detectors: one around the barrel and one at each end.

One constraint on the design is that we must reconstruct a Z^0 with a resolution comparable to its natural width. Muons from the decay of Z^0's have obtained a high rapidity from the differential rapidity of the two impinging partons. The forward and backward magnet systems detect these highest energy muons. Consequently, the Z^0 measurement resolution is dominated by the positional accuracy of the muon detectors. Monte Carlo programs have been run to evaluate the magnet and detector requirements. It is important that we have experimental confirmation of the accuracies achievable with our system.

2. Muon Detector Design Considerations

2.1. Specifications

In the current design, muon momenta will be measured with detectors covering the toroid magnet areas before and after the bending field. The requirements for these detectors follow.

a) Spatial measurement better than 200 μm, and effective resolution better that 50 μm using multiple wire measurements. The desired momentum resolution at the SSC, together with the proposed field strength, determines the necessary spatial precision.
b) Prompt output ($<$ 150 nsec.) for use in the level 1 trigger.
c) Timing information, so that muons can be assigned to the proper bunch crossing.
d) Absolute, monitored positioning of the detector elements to 25 μm.
e) Low cost.

f) Compactness; the space between the central calorimeter (at 3.5 m) and the central toroid (at 4.0m) is cramped.

g) Minimal dead regions; those from electronics cabling and detector end effects are unavoidable, implying that the resident electronics should be as small as possible.

2.2. Implementation

There are a number of detector techniques available to meet the specifications. One possibility is multichannel aluminum extrusion tubes operating in the streamer mode. Another is plastic extrusion tubes with a strip readout system. If the required precision can be obtained, strip readout offers the advantage of easier alignment than a wire readout system but with more complex electronics. High-pressure drift tubes with high single element resolution is also a possibility.

The final selection of a muon detector will be decided during R & D. At this time we have chosen to pursue the multichannel aluminum tube, wire readout system (Fig. 4g). The merits of this option follow.

a) Aluminum extrusions are easily mass produced and relatively cheap. Some finish machining may be needed to obtain the desired placement accuracy both within the tube and in stacking.

b) The streamer chamber pulses are typically 60 mV in 10 nsec. Such fast signals minimize amplification electronics.

c) The tubes themselves act as transmission lines, giving speed of light pulse transmission. We have measured little time degradation in rise time.

d) Staggering adjacent layers by half a tube width permits determination of the absolute time of traversal and therefore assignment to the proper bunch crossing.

e) Punchthrough rates, even at a luminosity of $10^{34}/\mathrm{cm}^2/\mathrm{sec}$, will not damage the tubes for a minimum of several years.

Single element resolution of 100-250 μm has been obtained, limited in one case[3] by multiple scattering and diffusion, and in another case[4] by mechanical alignment.

We have begun to build and test prototype chambers. We will test the chambers for ultimate resolution with a UV laser, and vary the chamber gas to

optimize performance. We also plan to study the effects of delta rays and electron pairs on resolution.

2.3. Prototype

The prototype we plan to test at Fermilab is a small scale version of one of the proposed EMPACT muon detectors. A mechanical drawing of the assembly is shown in Fig. 2. The detector is contained in a small, light gas box which can be manually oriented relative to the muon beam direction. The detector consists of 5 streamer chamber planes of 8 channels each, with drift time measurement on each channel. The chambers are precision-stacked in the gas box, with a variable spacing between the planes. This permits insertion of low-Z material between planes to control delta ray and e^+e^- pair production and their correlation between planes.

Since the streamer chamber pulses produced can be as large as 100 mV, the pulse discriminators are relatively simple. They can be set to fire at the few mV level, which occurs within fractions of a nanosecond of time zero. A layout schematic of the on-board electronics is shown in Fig. 3.

The output pulses will be digitized by LeCroy 2229 CAMAC TDC's, read out by an IBM-AT clone, and written on disk. All data analysis will be done primarily on the PC.

In order to test a system suggested by Gena Mitselmakher of Dubna, we plan to also provide a strip pick-up system with its attendant electronics (a panoply of ADC's).

The ultimate cost of a full system for the SSC depends critically on the number of wires instrumented. A large cell size minimizes the number of instrumented wires. However, this increases the electronic pipeline dwell time, which increases costs and gives tougher timing problems. Testing a second reference cell will allow us to find an optimum cell size. The first tests will use a 1 cm cell; a second set of instrumented chambers is being made with a 2.5 cm cell.

This prototype system will be tested at M.I.T., first with a UV laser beam (the perfect muon), and then with cosmic ray muons. After these tests, we expect to arrive at Fermilab with a running system.

We plan to test a variety of gasses and gas mixtures. The quantities will be small but some will be in the flammable range; e.g., $> 10\%$ hydrocarbons.

3. Prototype Tests at Fermilab

We request running time in the E-665 muon beam, starting with the November-December '90 scheduled run time. Since it is unlikely that we could complete all of the tests we desire within this period, we hope that muon beam running will continue into '91.

3.1. Test Runs

A list of test runs and their motivation follows.

a) Preliminary runs in halo, at normal incidence and at various angles. This will investigate the ultimate accuracy of this design and give a preliminary estimate of delta-ray contamination.
b) Repeat (a) with various gasses at various pressures.
c) Runs with strip pick-up system.
d) Run in primary beam to magnify delta ray and pair production interference.
e) Insert absorbers between chambers to investigate the minimization of delta ray and pair production effects.
f) Repeat (a) - (e) with 2.5 cm cell chambers.
g) If feasible, we would run the pick-up strip scheme in parallel. Otherwise, we would repeat (d) - (f) with this second scheme.

3.2. Laboratory Responsibilities

We have tried to make our prototype system self-contained and relatively independent in order to minimize our request for services.

3.2.1. M.I.T.

We will provide the following items.

a) Streamer chambers, gas box, and on-board electronics.
b) HV supplies.
c) Readout electronics.
d) PC for readout and analysis.
e) Trigger counters.
f) Non-standard gasses.

3.2.2. Fermilab

We require the following services from Fermilab.

a) Floor space in the E-665 area for:
   i) Muon Telescope and stand, 5′ x 10′;
   ii) 2 racks, desk, chairs, etc. for electronics and PC;
   iii) 1 gas rack (4 standard bottles); see Fig. 4 for possible layout.
b) Gas line appropriate for flammable gas:
   i) gas rack to chambers;
   ii) chambers to outside.
c) 110 volt power lines.
d) Safety inspection and approval: HV and gas.
e) Rigging (minimal).
f) A hole in the security cage at beam height (ten by ten inches) which will allow pulling our telescope in and out of the security area. A rolling cart to hold the telescope at beam height (we can supply) and manipulable from outside the security cage by a simple mechanical linkage.

3.3. Liaison

We are aware that another proposal (Contact Person: H. Lubatti) has requested time and space in the E-665 area. We are in contact with this group and, in fact, will be very much interested in their measurements and results. So that there will be no interference between these two proposals, our floor layout plan has been taken from the Lubatti proposal, with our set-up behind theirs as shown in Fig. 4. We join them in urging that the spoiler magnets downstream of E-665 be pulled as far back as possible to give maximum clearance for our experiments.

REFERENCES

1. M. Marx, "EMPACT", SSC Publication, SSC-219, May 1989.
2. EOI-EMPACT Group, Submitted to SSC, May 1990.
3. K. Fujii et al., N.I.M. 225 (1984) 23.
4. F. Gasparini et al., N.I.M. A267 (1988) 87.

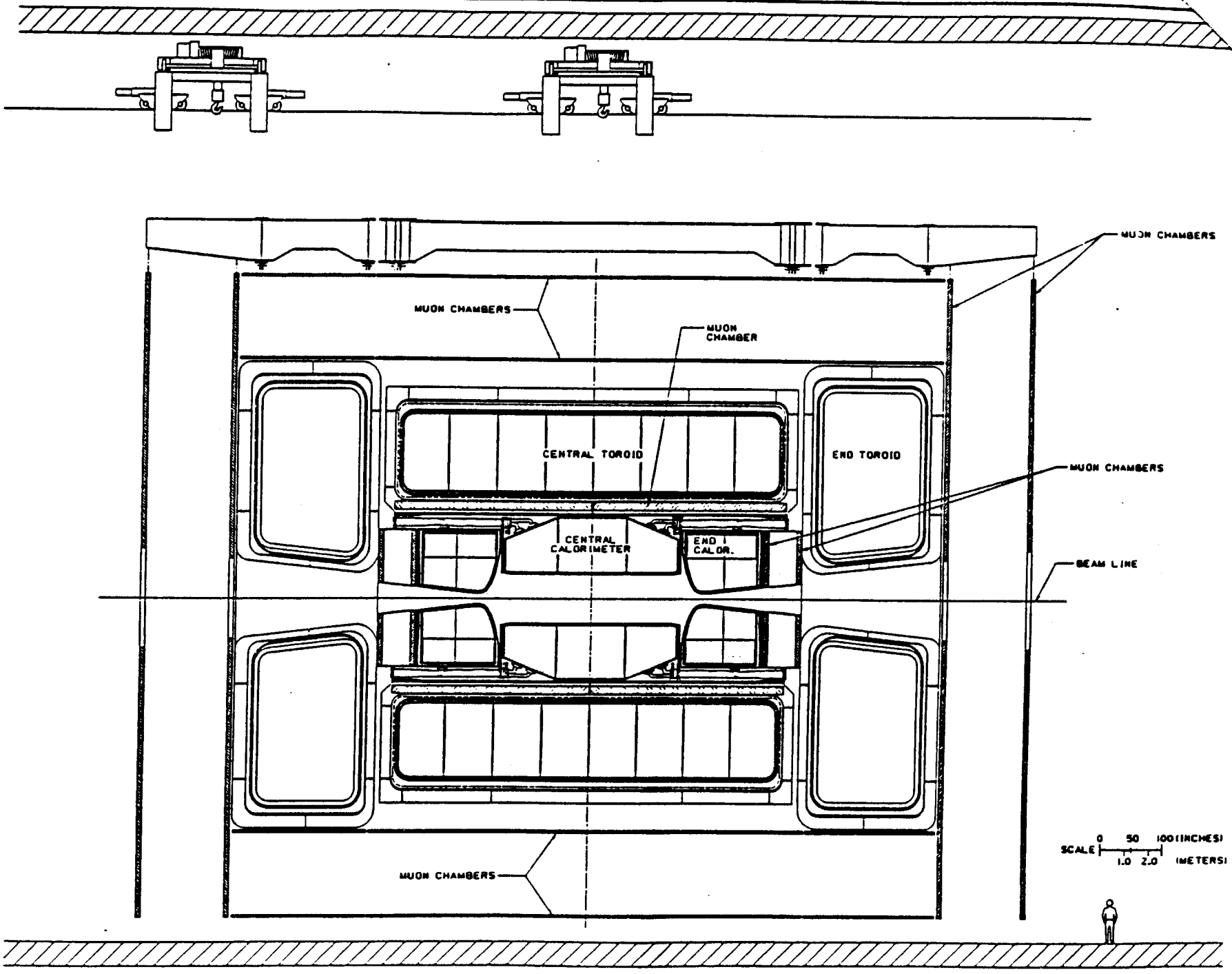

Figure 1 EMPACT DETECTOR

GRU.DLA.SSC.ASSEMBLY 3-19-90

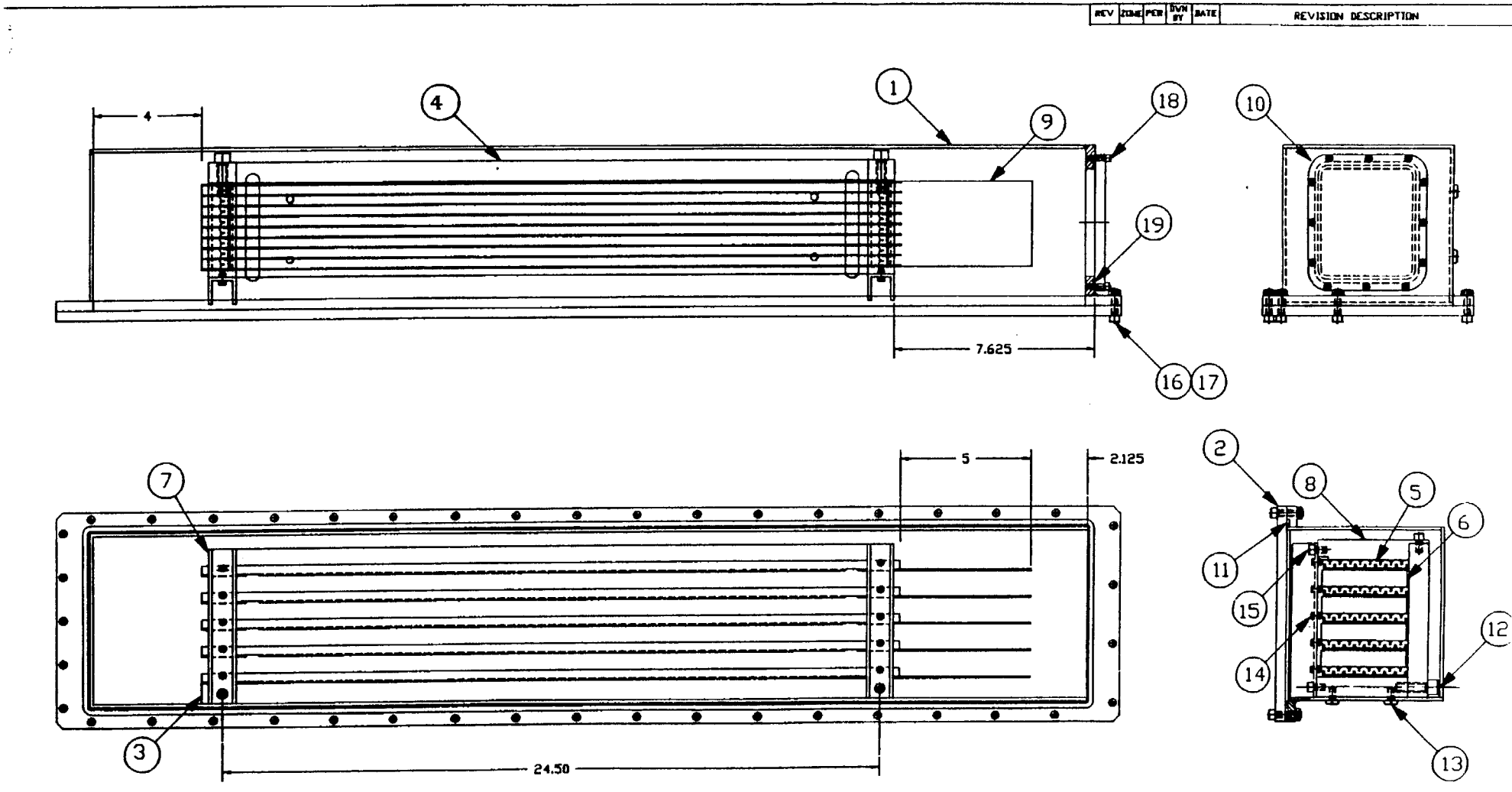

NOTES

1. ALL DIMENSIONS ARE FOR REFERENCE PURPOSES ONLY

Figure 2 - Muon Test Chamber Mechanical Layout

MATERIAL

FINISH

SHOP NOTES UNLESS OTHERWISE SPECIFIED

NEXT ASSEMBLY

SCALE 1:2

DRAWN FOR L S OSBORNE

DRAWN BY D M BAILEY

4/27/90

LABORATORY FOR NUCLEAR SC

MASSACHUSETTS INSTITUTE OF TECH

CAMBRIDGE, MASSACHUSETTS

WIRE POSITIONE

TEST ASSEMBL

SSC TEST CHAMBER

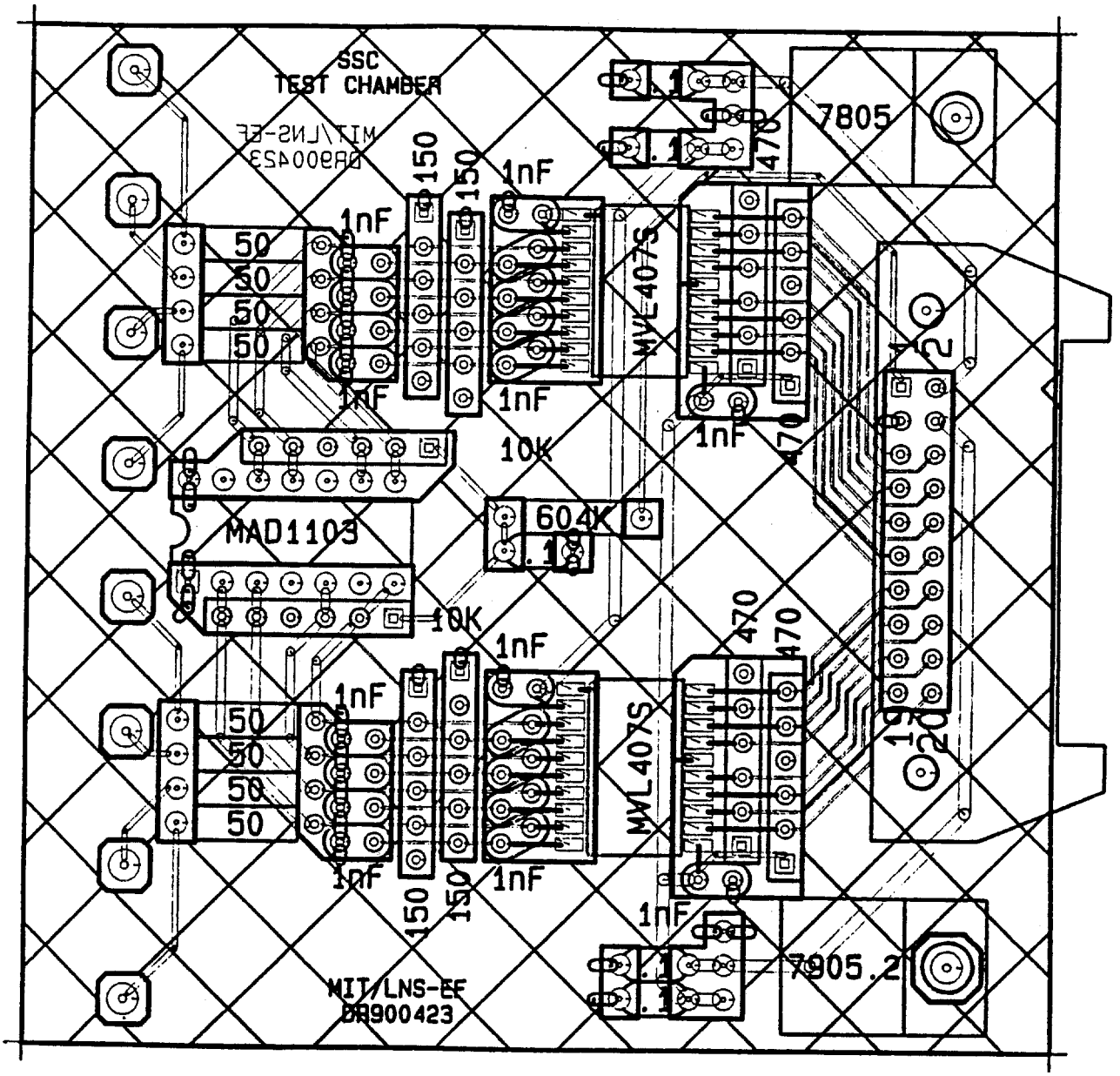

Figure 3 - Layout for Muon Test Chamber Electronics

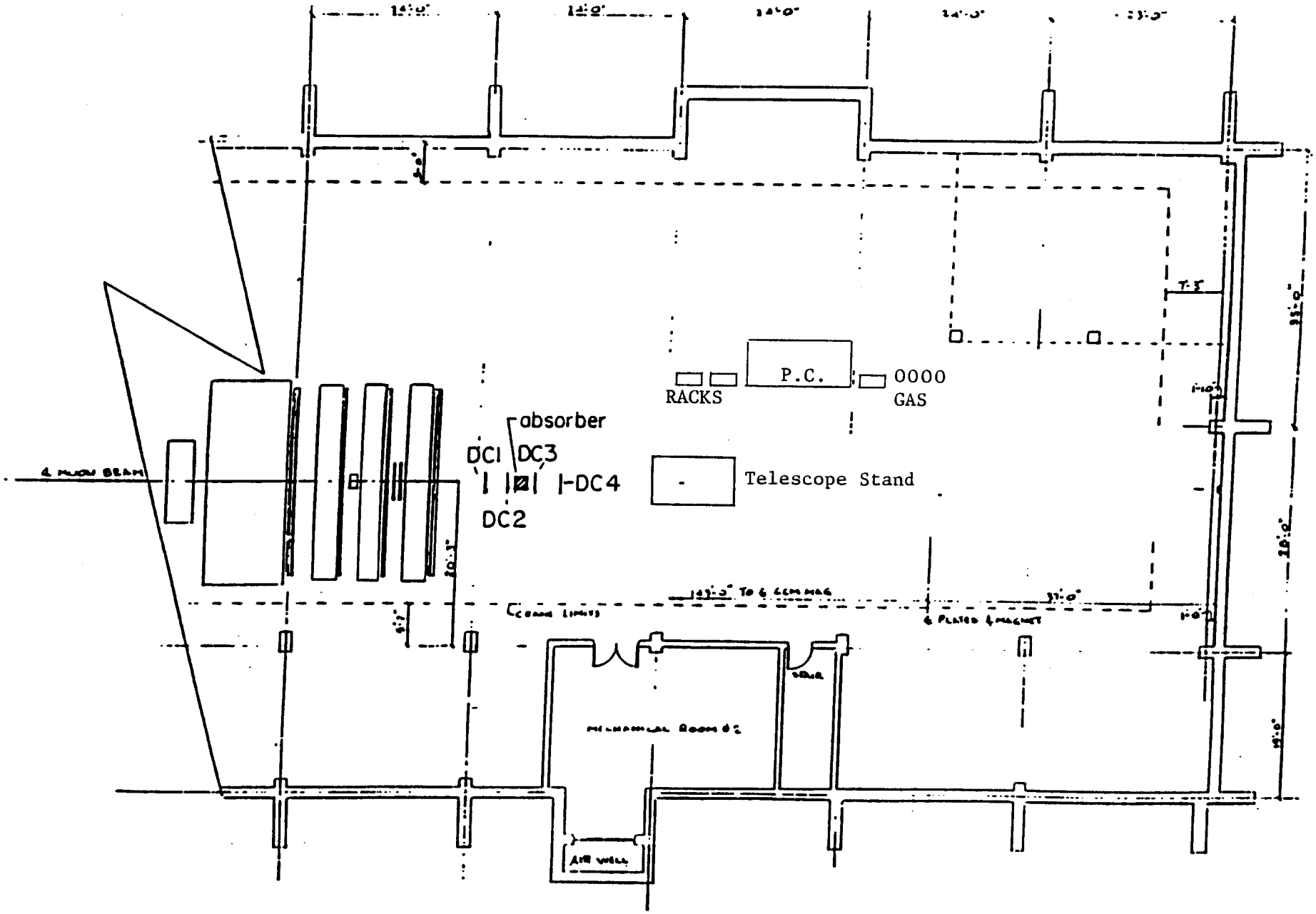

Figure 4 - Layout in Muon Lab for EMPACT Telescope