FERMILAB-Proposal-0870

PROPOSAL*

for the

TESTING OF PROTOTYPE DETECTORS FOR THE SDC

at

FERMILAB

January 1993

*Correspondents: D. Green
(708) 840-3104
FNAL::DGREEN

M. Lamm
(708) 840-4098
FNAL::LAMM

J. Siegrist
(214) 708-6086
SSCVX1::SIEGRIST

AAB 8946

1.0 INTRODUCTION

The Solenoidal Detector Collaboration (SDC) has proposed to design and build a general purpose, magnetic detector for use at the SSC. A complete description of the SDC detector is given in the Technical Design Report [1]. Previously, R&D related to SDC has been carried out by distinct efforts. In particular, test beam work at Fermilab has been done in MT, MP, NM, and NW, in addition to efforts at other labs. With completion of the SDC proposal, test beam work will now be centrally coordinated. We propose to have an 'SDC Test Beam' at Fermilab at which most beam studies needed for completion of the detector will be conducted.

The SDC detector is an enormous enterprise and has within its scope many efforts. A primary goal of test beam work at FNAL is to provide the incisive tests by which the technologies being considered by the SDC may be evaluated. The next test beam run at Fermilab also will be the first time that substantially engineered 'full-scale' prototype detectors for the SDC can be tested for those detector systems where the technology has been chosen, e.g. calorimeter and muon subsystems. These tests are crucial to maintaining the schedule for SDC construction.

A detailed parameters list for the preliminary baseline detector and its options is contained in the SDC Parameters Book, SDT-000010. An isometric view of the baseline detector configuration is shown in Figure 1.1. Figure 1.2 shows a quarter section view of the detector. A brief description of detector subsystems to be tested at FNAL follows:

1.1 Tracking Detectors

A sophisticated tracking system surrounds the interaction point. The tracking system consists of an inner silicon tracker and an outer tracker. Two options are presently under consideration for the outer tracker:

1. A straw-drift-tube barrel tracker covering letal < 1.8 together with an array of gas micro strip detectors covering the region 1.8 < letal < 2.8 (baseline option) or

2. A scintillating fiber tracker option covering letal < 2.3.

A schematic view of the tracking options is shown in Figure 1.3 and 1.4.

1.1.1 Silicon Tracker

The silicon tracker consists of approximately 17 m**2 of instrumented silicon strip detectors. The silicon tracker is composed of a barrel region consisting of eight cylindrical layers of double-sided silicon strip detectors, which provide axial and small-angle stereo measurements. Thirteen double-sided disk detector arrays on each side of the barrel complete the system (Figure 1.5). Each double-sided detector is about 300 microns thick and has a strip pitch of about 50 microns. The detectors and the on-board electronics are mounted within a low mass, highly precise space frame. This structure is in turn enclosed by a thin double-walled vessel, since cooling of the electronics heat load is provided by evaporating butane (Figure 1.6). We are considering the implementation of the two

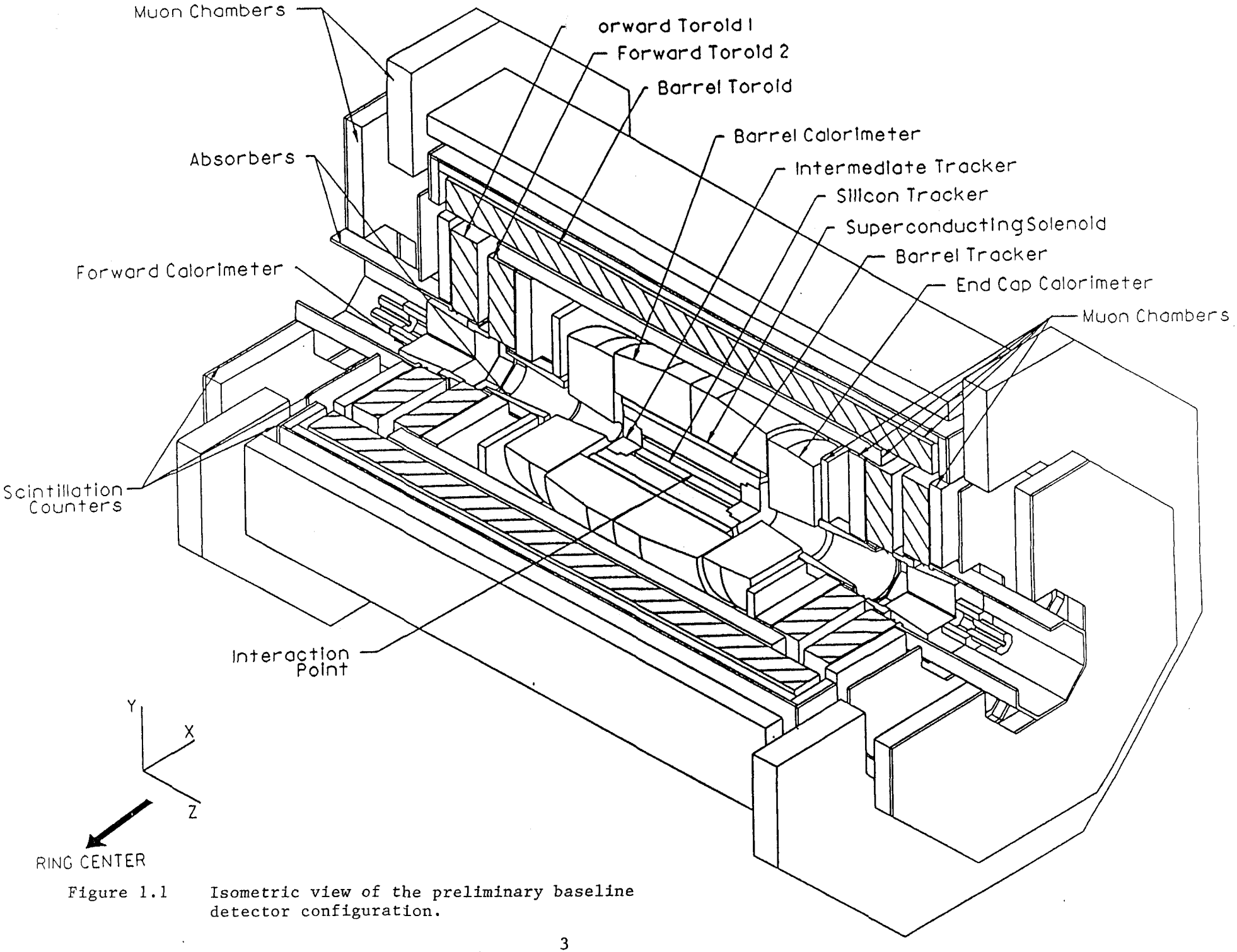

Figure 1.1 Isometric view of the preliminary baseline detector configuration.

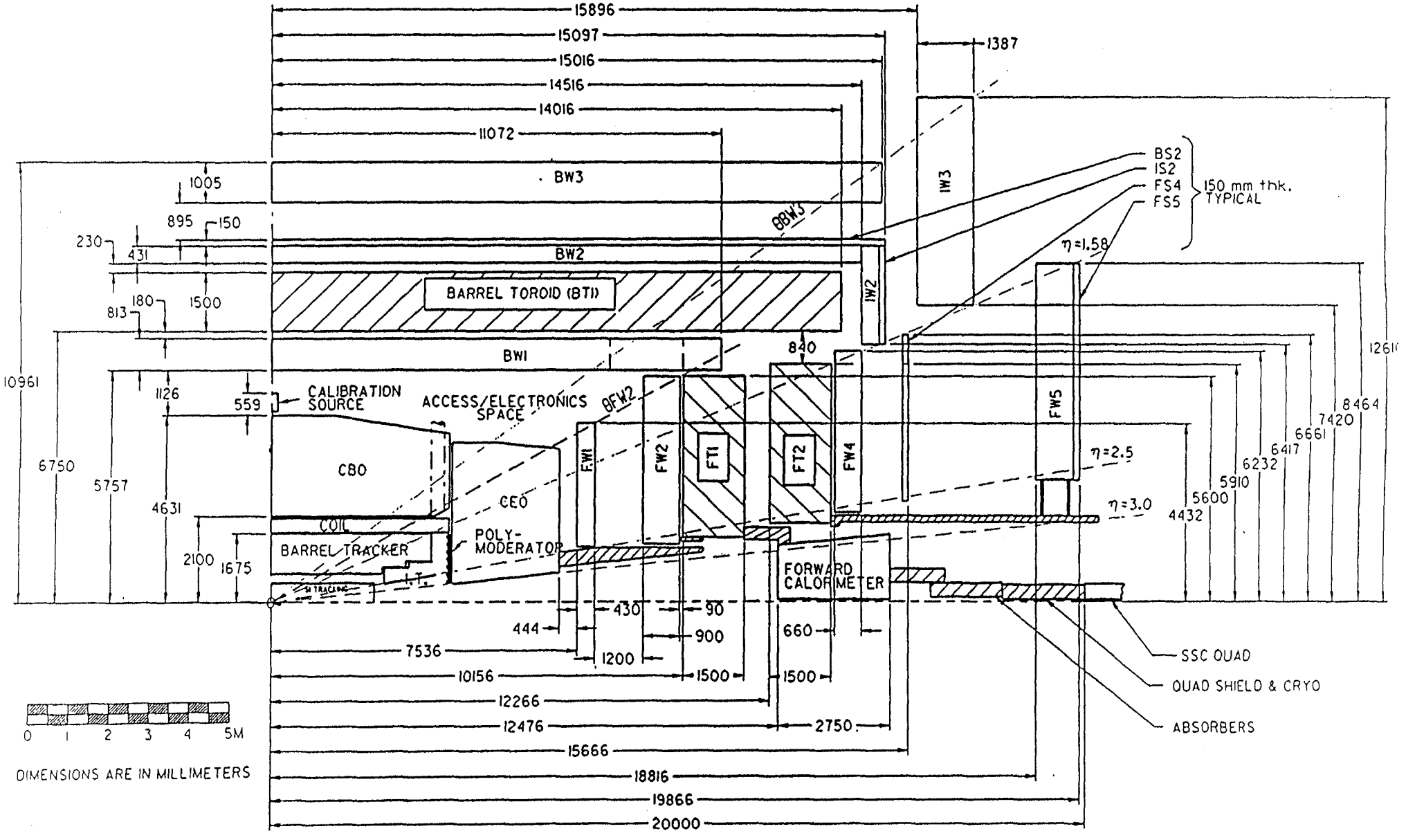

Figure 1.2 Layout of the muon system.

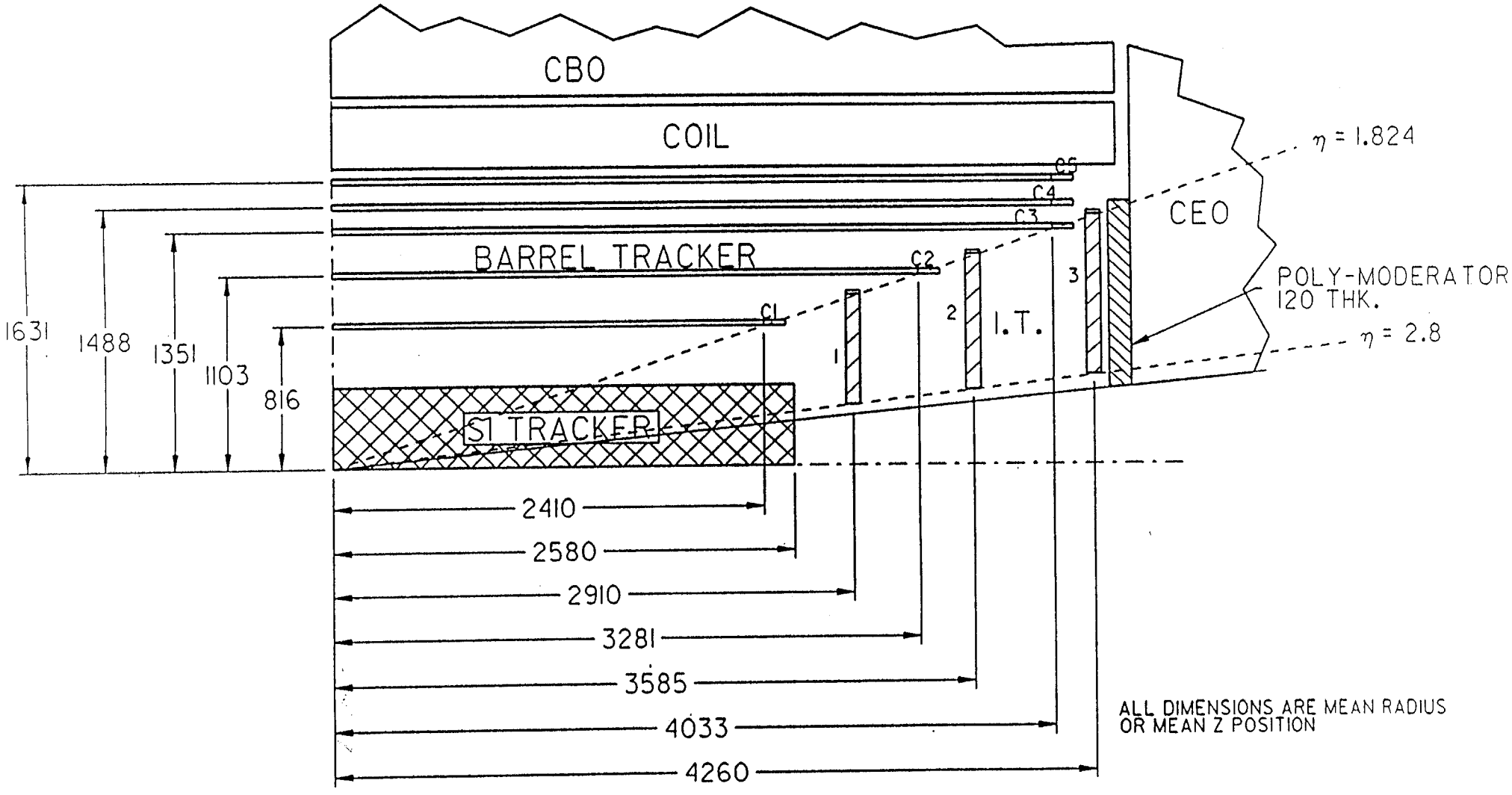

Figure 1.3 Schematic view of baseline tracking system configuration (silicon tracker, barrel straw-drift-tube tracker and gas microstrip intermediate tracker). Support structures and cables are not shown.

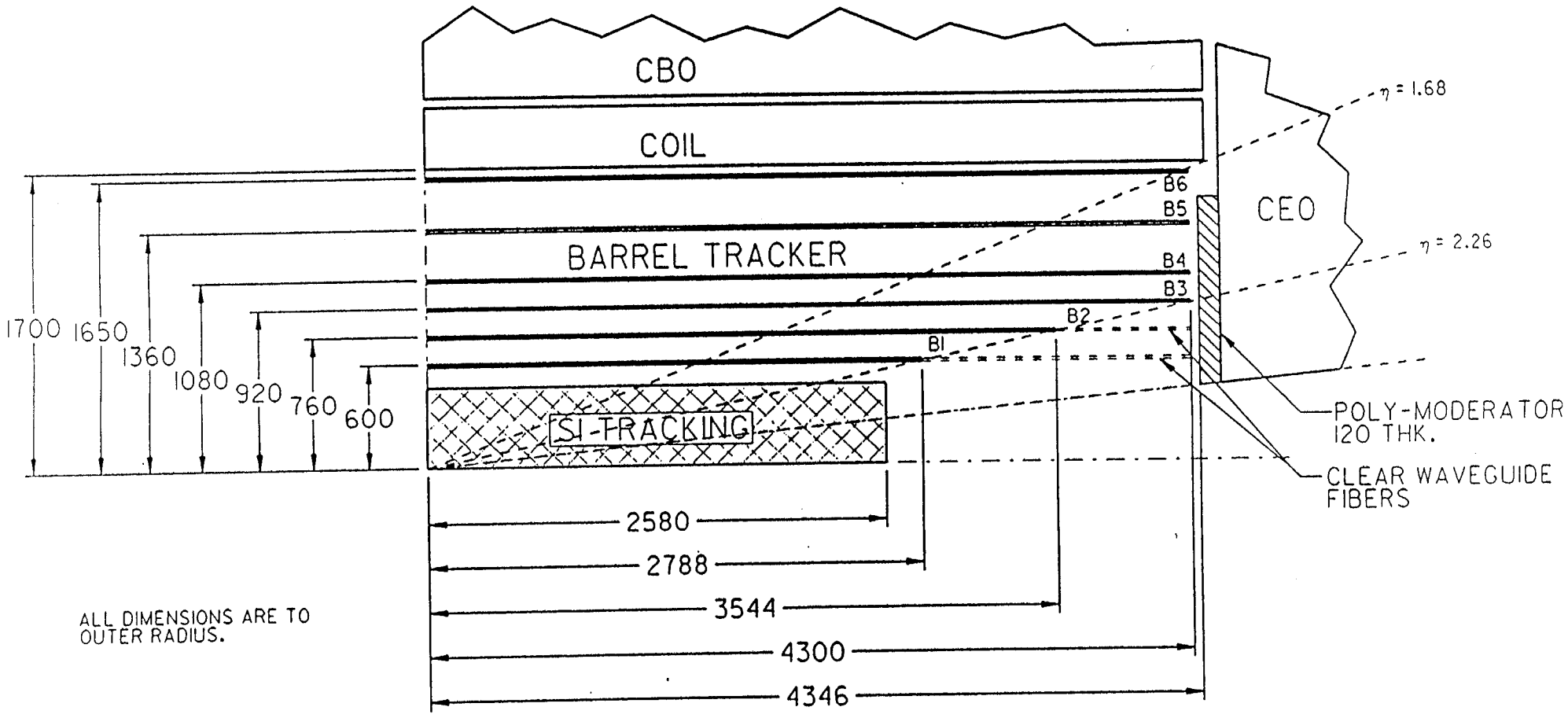

Figure 1.4 Schematic view of the scintillating fiber option for the outer tracker. The details of the support structure are not shown.

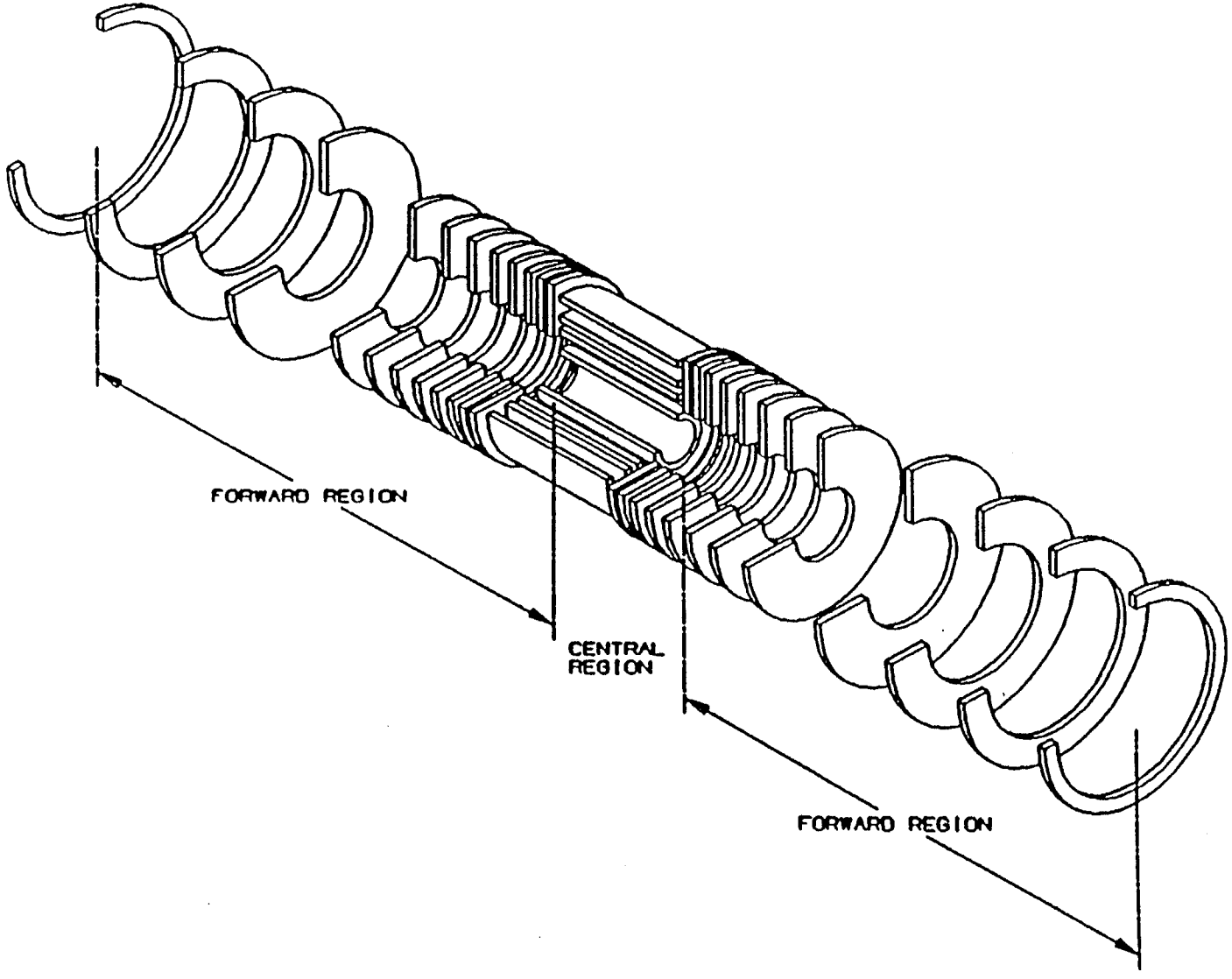

Figure 1.5 STS Detector Arrays (isometric view)

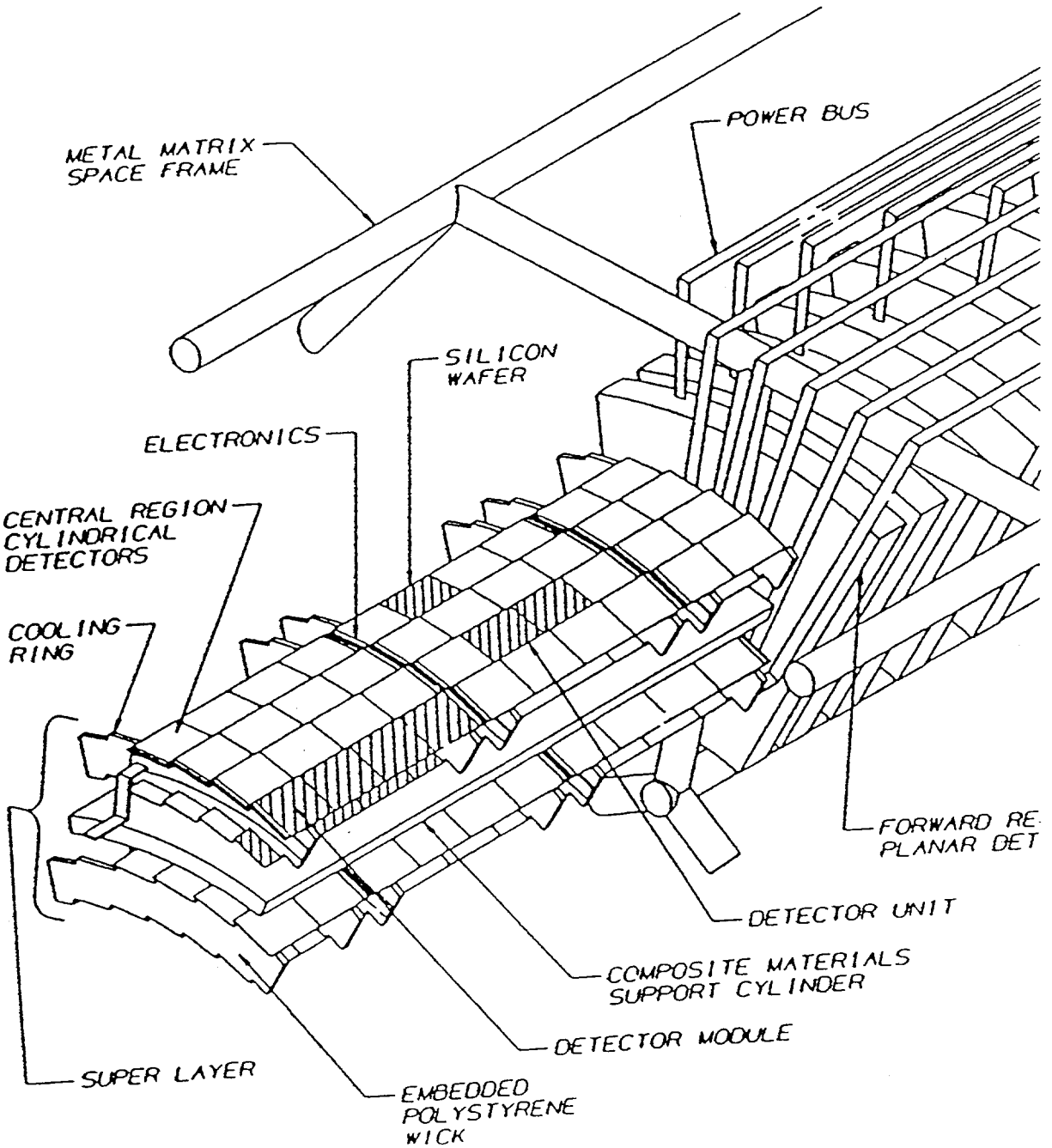

Figure 1.6 STS power cabling layout depicted on an arc section.

innermost layers as pixel devices as a possible option or upgrade, if research and development indicates the feasibility of doing so at reasonable cost.

1.1.2 Straw-tube Barrel Tracker Baseline

We have chosen a straw-tube barrel tracker for the preliminary baseline configuration because its performance is relatively well understood. At the present time, we believe that the combination of the established drift tube technology together with the new gas micro strip technology has lower risk than the scintillating fiber option for the outer tracker. The status of all three technologies will be reviewed in depth in early February 1993 to determine if a final baseline design can be selected.

The layout of the straw-tube barrel tracker option has already been shown in Figure 1.3. The 4 mm diameter straw tubes are contained in carbon-fiber-foam modules that provide a precise and rigid structure to both locate the straws and maintain the wire tension (Figure 1.7) The modules are located precisely on machined composite rings supported by carbon-fiber-foam composite cylinders. The cylinders are supported by a space frame composed of carbon-fiber-epoxy elements. All structural elements have been designed to be as low-mass as possible while still providing structural rigidity to maintain alignment tolerances. Both axial and stereo measurements are provided by this system. A Level 1 trigger is provided by identifying high-p_t local track vectors in any two out of the three axial super layers. Each axial (stereo) super layer contains eight (six) layers of straws. The modules are 4 m long or less with a termination, but no active electronics, at the middle at eta = 0.

A gas mixture of tetrafluoro-methane (80%) and isobutane (20%) is used in the straws. The mixture provides a maximum drift time of about 30 ns, which is reasonably matched to the SSC interaction rate. The straw-tube cathodes are very thin copper-coated Kapton, which has been demonstrated to have better radiation resistance than aluminum cathodes.

1.1.3 Gas Micro strip Intermediate Tracker - Baseline

In the rapidity interval $1.8 < |eta| < 2.8$, we propose to use a new technology, gas micro strip detectors. A gas micro strip detector (GMD) consists of fine metallic anode and cathode traces placed on a thin substrate (e.g. glass) separated by a gap of a few millimeters from an electrode to provide a drift region. High voltage connections are made to the cathodes, drift electrode and substrate and signals are read out on the anodes. The anode pitch is typically a few hundred microns and in our design it varies with rapidity. The GMD technique has good spatial resolution, excellent two-track resolution and high speed of response. These parameters are well matched to the requirements of the intermediate tracker. Tests of this technology are expected to occur largely in Europe.

1.1.4 Barrel Tracker - Scintillating Fiber Option

The layout of the fiber tracker option has already been shown in Figure 1.4. Doublets of scintillating fibers are precisely arrayed on the inside and outside of carbon-fiber foam composite cylinders. The cylinders are held by a precise composite framework located at the ends of the cylinders. Both axial and small-angle-stereo measurements are

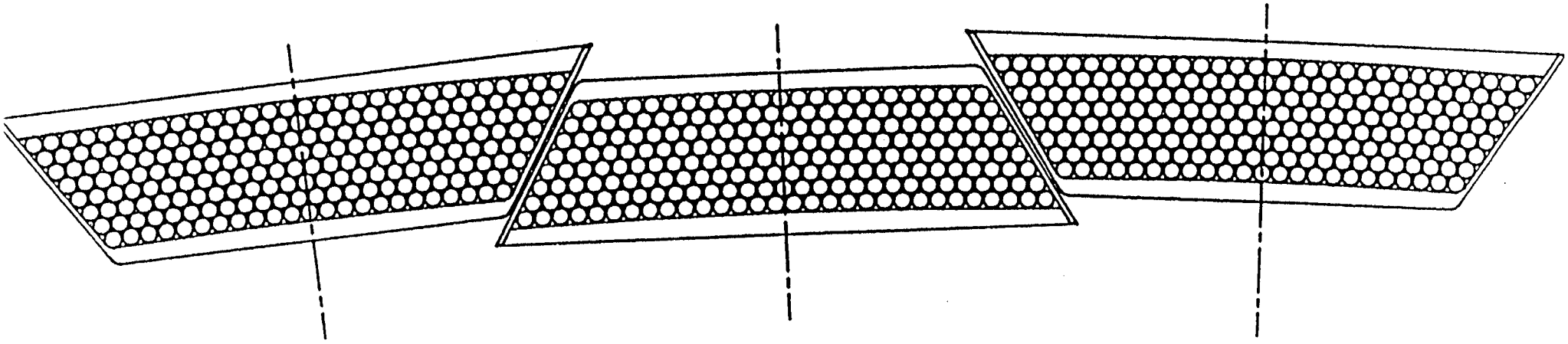

Figure 1.7 Axial straw superlayer modules

provided by the fibers. The scintillating fibers are coupled to clear fibers that transmit the light to solid state photo sensors, Visible Light Photon Counters (VLPC's) that are located on the outside of the central calorimeter. The VLPC's have high quantum efficiency (up to 80%) and are located in helium cryostats to maintain the 7K temperature required for their operation. Electronics for the fiber tracker are also located on the back of the central calorimeter.

The scintillating fiber option has occupancy that is significantly less than the straw-tube option and thereby might be expected to have better performance at luminosities greater than the design value. The trigger is implemented by correlating signals in the inner three super layers, providing uniform trigger coverage up to letal < 2.3. However, there is somewhat greater material, on average, in the fiber option although concentrations of material due to electronics and supports in the straw-tube/GMD option are eliminated by the design. There is also a reduction in rapidity coverage in the present fiber design, which covers letal < 2.3.

1.2 Calorimetry

The goals of the calorimeter systems are to provide electron and photon identification and energy measurement (in conjunction with the tracking system), to measure the energies and directions of jets and to provide hermetic coverage for missing transverse energy measurements. In the central region (letal <3) we have chosen scintillation calorimetry with lead absorber and iron absorber for the electromagnetic and hadronic sections, respectively. The scintillating detection elements are divided into tiles, each tile being read out by a wave length shifting (WLS) fiber. The fibers are brought to the rear of the calorimeter, bundled, masked and read out by photo multiplier tubes. In the forward region (3 < letal < 6), we are considering two options: high pressure gas ionization readout or liquid scintillator in small tubes.

1.2.1 Central Calorimetry

An elevation view of the central calorimeter is shown in Figure 1.8, and a quarter section in Figure 1.9. The central calorimeter is composed of a barrel section, which in turn is built in two halves, and two endcap sections. In the barrel region there is a single electromagnetic depth segment, which can be upgraded to two depth segments by rerouting fibers and adding photo tubes. In the endcap section, there are two electromagnetic depth segments to allow for better correction of radiation-damage effects, which are more important in this region. In both the barrel and endcap, the iron hadronic absorber is segmented into two depth compartments (HAD1 and HAD2). The transverse segmentation is deta x dphi = 0.05 x 0.05 in the electromagnetic sections and 0.1 x 0.1 in the hadronic sections, except near letal = 3 where the granularity is coarser.

A shower maximum detector (SMD) composed of crossed strips of scintillator about 1.2 cm wide is located near the shower maximum point in both the barrel and endcap regions. The SMD aids substantially in the identification of electrons and photons by measuring the shape and location of the electromagnetic shower. The SMD is also used in the trigger to provide correlation's with the central tracker. A separate preshower (PS) readout of the first EM tile aids in recovering resolution lost by interactions in the solenoid coil and in π^0/γ and π/e rejection.

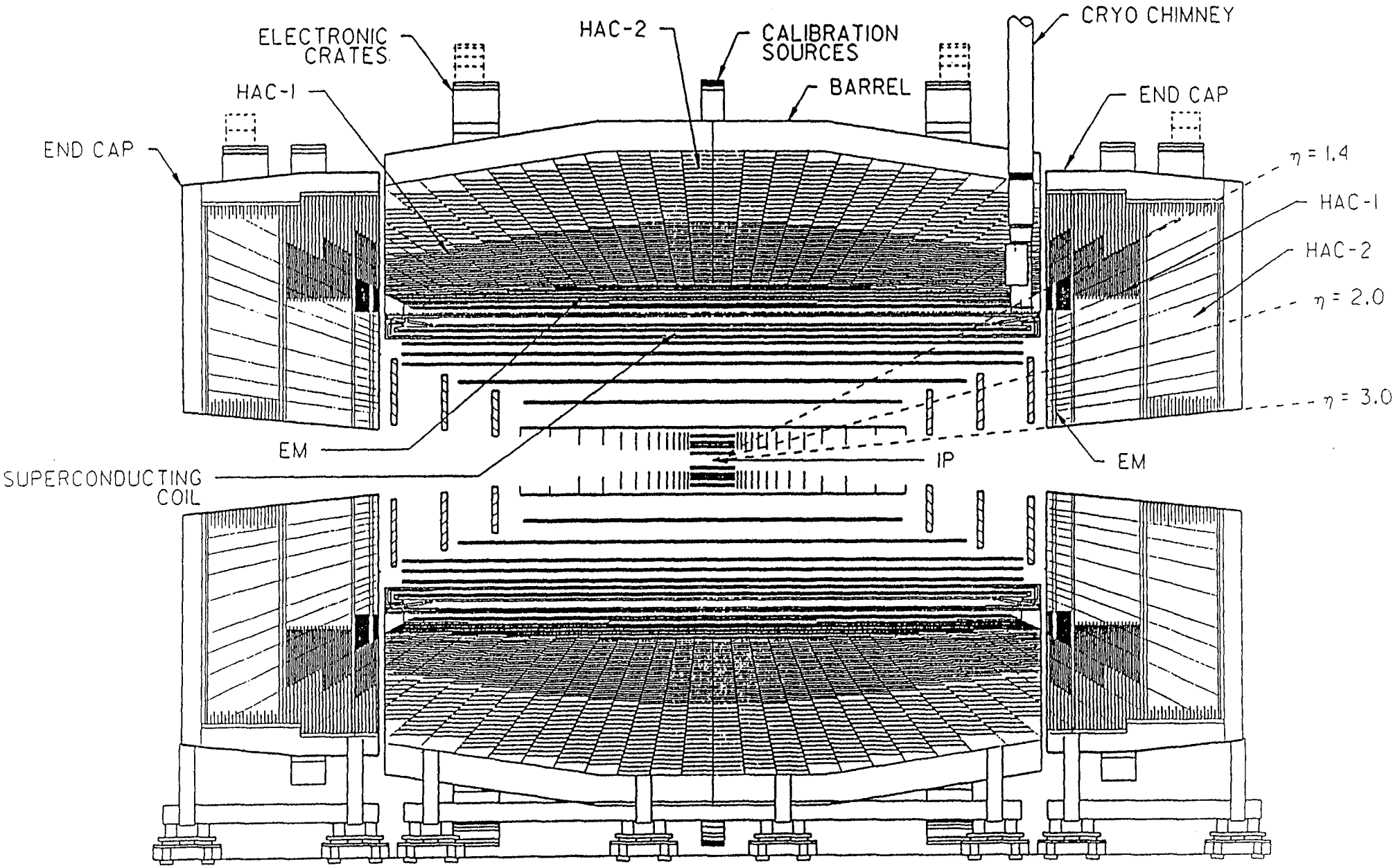

Figure 1.8 Elevation view of the central calorimeter. The barrel calorimeter displays one line per longitudinal cell (absorber boundary), whereas the endcaps display two lines per cell (which are partly cut away).

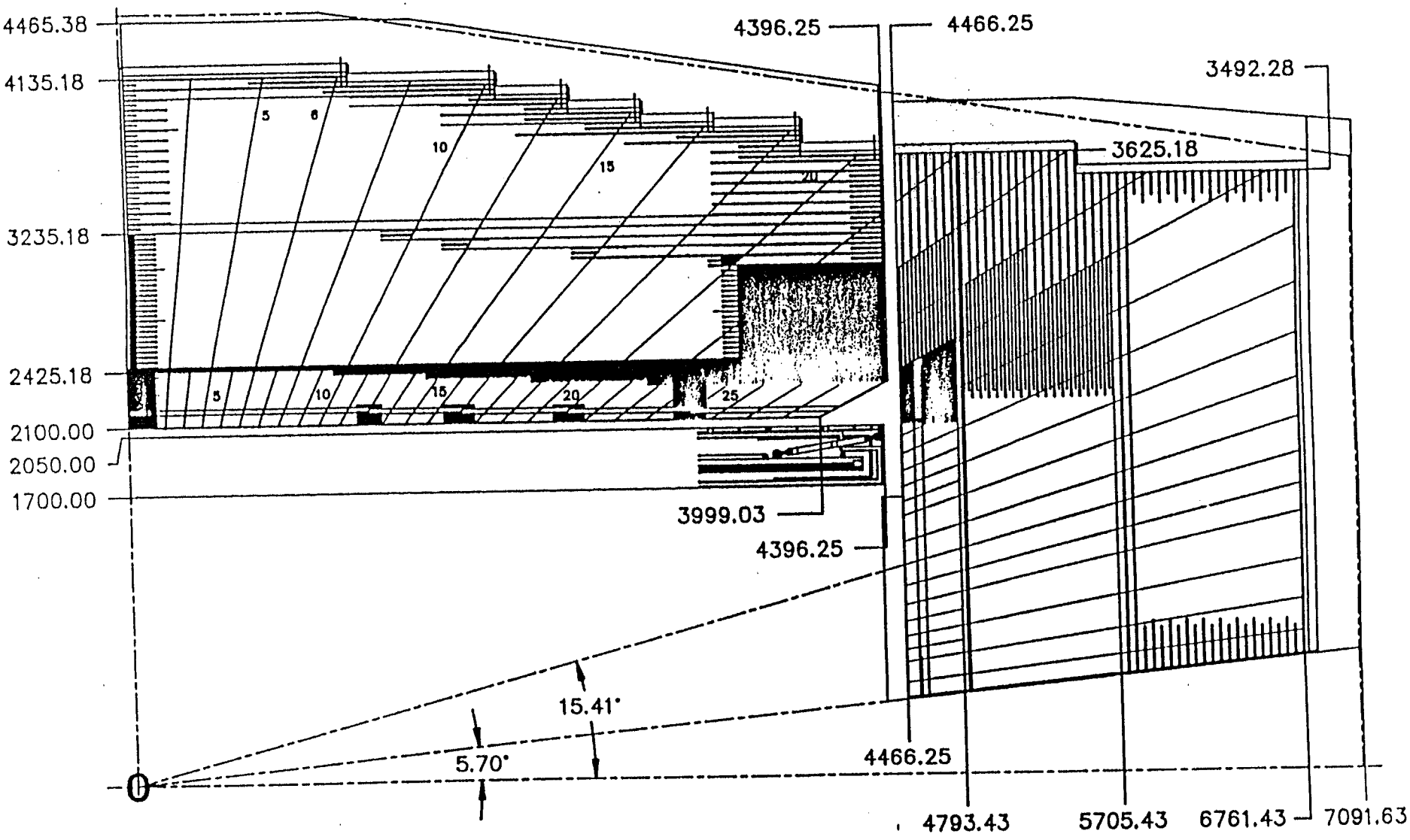

Figure 1.9 Barrel Calorimeter--a quarter cross section of the tile/fiber central calorimeter. The EM sections are fabricated with cast lead alloyu; the hadron sections are formed by stacked steel plates welded together. A shower maxiumu detector is included in the EM section.

Both the tiles in the tower segments and the strips in the SMD are readout by WLS embedded in grooves located in each tile or strip. The fibers are routed to the back of the calorimeter. For the tower segments they are bundled and masked on a fiber-by-fiber basis using filters placed between the fiber bundle and the photo multiplier tube. This masking technique can smooth out variations from tile to tile to provide a more uniform response in depth. The required degree of masking as well as the responses of the tiles are determined by an extensive system of remotely movable radioactive sources that can illuminate and calibrate all tiles. The fibers from the SMD are read out by multianode photo-arrays. Local electronics for the calorimeter (and the central tracker) are mounted in crates on the back of the calorimeter to minimize the high-bandwidth cable paths.

1.2.2 Forward Calorimetry

The forward calorimeter covers the rapidity range from $|\eta| = 3$ to about $|\eta| = 6$. Measurement of jet energies and angles in this region is critical to the measurement of missing transverse energy. In addition, tagging the presence of jets in this rapidity region may reduce backgrounds in the observation of signals in the central detector. The forward calorimeter is located about 12.5 m from the interaction point. Our detector is designed to provide adequate measurement of missing transverse energy, and identification of forward jets.

Radiation doses are much higher in the forward direction and the feasibility of operation under such extreme conditions to a large extent determines the technologies that can be employed. Two options are under consideration for the sampling medium in the forward calorimetry: high pressure gas (about 100 atm of argon) and liquid scintillator in glass tubes. In both cases the sampling medium may require periodic replacement after accumulation of large doses of radiation.

1.3 Muon System

The muon system provides the capability to identify muons, trigger on them, and make independent measurements of muon momenta. Large magnetized-iron toroids (see Figure 1.2) cover the rapidity range $|\eta| < 2.5$. Drift tube chambers measure the deflections of muons in the iron toroids and scintillation counters provide a precise timing signal to tag the bunch crossing of interest. At design luminosity, the primary muon momentum measurement in the central rapidity region is performed by the central tracker. In the forward region, the muon system itself has better momentum measurement capability at high p_t, since the central tracker resolution is poorer at high rapidity.

The barrel iron toroid is composed of large iron segments bolted and welded together. The barrel toroid sits on a support structure that is designed to accommodate to both long-term floor motion and short-term motion from the movement of the remaining detector components onto the toroid. The thickness of the toroid is the minimum depth needed to provide a reasonable Level 1 trigger rate and good muon detection efficiency.

The forward toroids are octagons with inserts to make the field as uniform as possible. Muons in the forward direction typically have higher momenta than those in the central region and thus greater stand-alone momentum measuring precision is required.

Three meters of magnetized iron is sufficient to provide adequate measuring power for TeV muons.

In the baseline concept, all muon chambers consist of round drift tubes with field-shaping electrodes, which provide a near-linear time-to-distance relationship with the appropriate gas mixture (for example Argon-CO_2) and thus better spatial resolution (about 250 microns) than simple drift tubes without field shaping (Figure 1.10). In addition, the field shaping allows for two-track resolution of about 5 mm, which is needed to find muon tracks in the presence of electromagnetic debris created by the passage of multi-hundred GeV muons through the iron toroids and the chamber walls. The diameter of the drift tubes is larger in the barrel and intermediate regions, where the muon rates are lower than in the forward region. In the barrel and intermediate regions, the chamber elements are packaged as super modules on the surface (Figure 1.11), lowered into the underground hall and mounted on the barrel toroid. A similar procedure is used for the forward system. Alignment systems are used throughout to calibrate the plane-to-plane alignment to an accuracy of about 150 microns in the barrel/intermediate region and the forward region.

Measurements in the muon chamber system are primarily for determining the muon deflection in the toroids (theta measurements), but phi and stereo measurements are also made in barrel/intermediate region and stereo measurements in the forward region. Stereo measurements are needed to associate tracks in the non-bend direction. The phi measurements are used for pattern recognition and, in association with the central tracker, to improve the momentum measurement precision at high transverse momentum.

A pt-sensitive Level 1 trigger is formed by measuring the track deflection due to the toroids in the outer chamber layers (BW2/BW3, IW2/IW3 and FW4/FW5). The drift tubes are arranged to be projective to the interaction point. The measurement of drift-time differences between selected planes provides information related to the transverse momentum of the muon. Trigger p_t thresholds can be varied by selecting different windows in the time differences. Since the drift time in the tubes can be as much as 1 microsecond, the scintillators are used to identify the correct beam crossing. There is a single layer of scintillation counters, each with two photo tubes, in the barrel/intermediate region and two layers of counters, each with one photo tube, in the forward region, where rates are higher. We are considering the option of using a Cerenkov counter in the forward direction to reduce the sensitivity to neutron backgrounds, but further study is required.

1.4 Electronics and DAQ Systems

Front-end electronics will be designed to match the requirements for each distinct detector subsystem. All detector subsystems require the design and fabrication of application-specific-integrated-circuits (ASIC's) to meet performance requirements for the front-end systems. Specific front-end circuits are required for the silicon tracker, the straw-tube tracker or the fiber tracker, the gas micro strip tracker, the calorimetry, and the muon chambers. The circuitry for the gas micro strip tracker shares many features with the silicon design, and the muon front-end circuitry is similar to but less complex than the straw-tube circuitry.

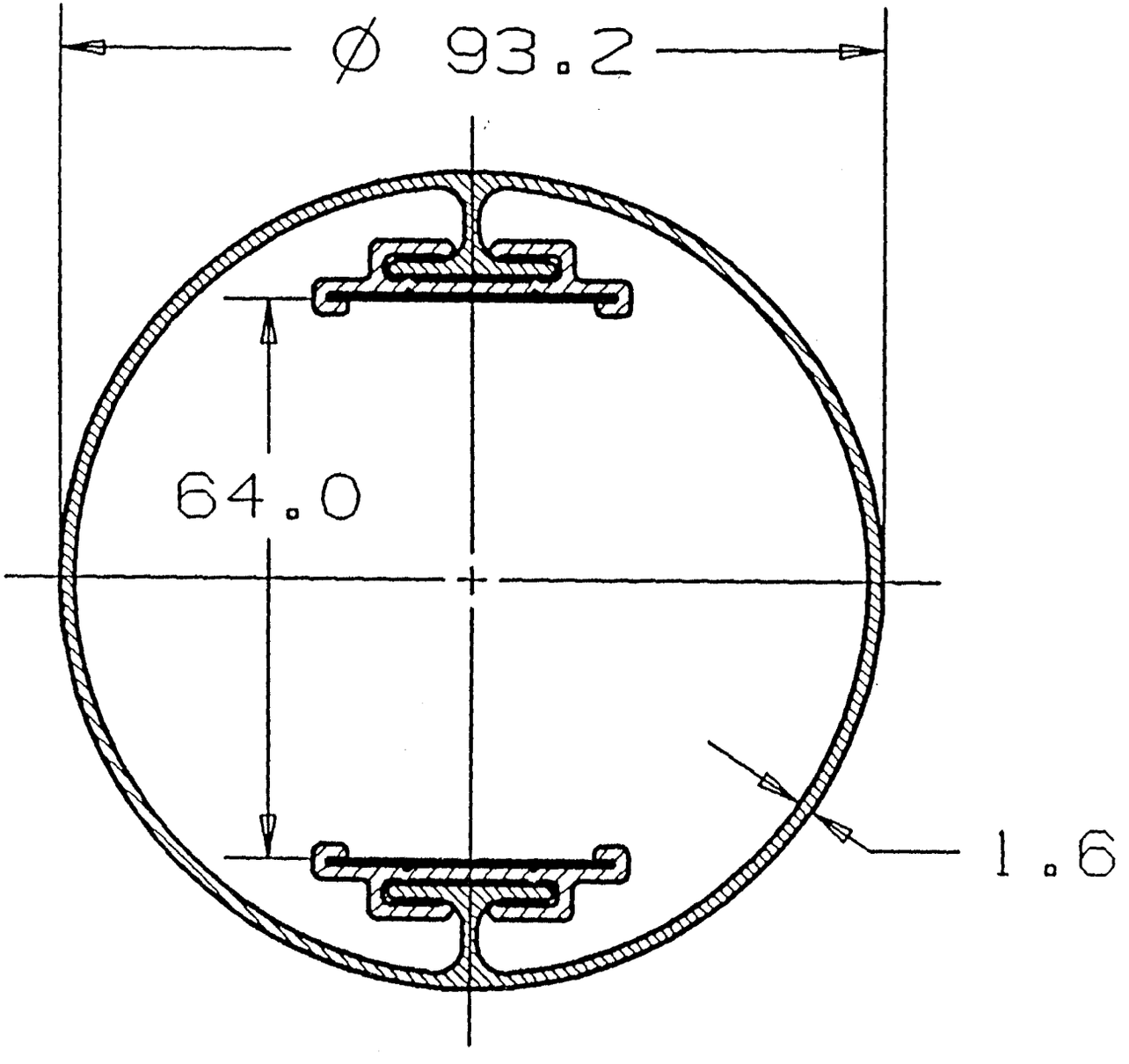

Figure 1.10 Drift tube cross section.

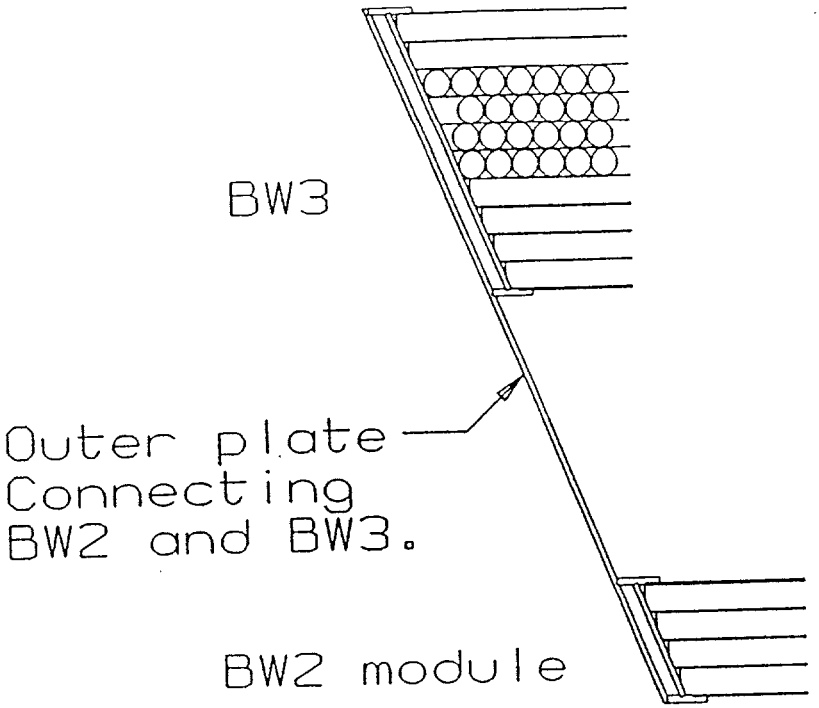

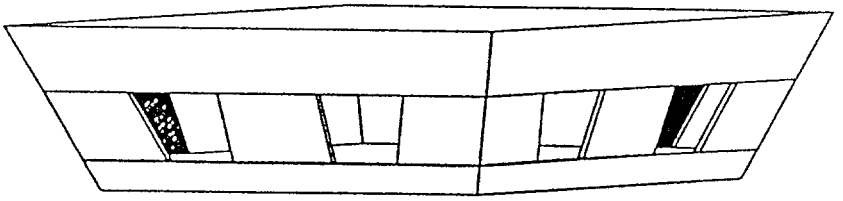

Figure 1.11 BW2/BW3 Assembly

2.0 TEST AND CALIBRATION BEAM PLAN

2.1 Introduction

The development of the detector subsystems requires extensive tests in particle beams of varying types and intensities. Once the design and prototype phase is completed, calibration beams will be required to evaluate and monitor the performance of detector subsystems, primarily calorimetry, over the lifetime of the experiment. We expect the broad utilization of international accelerator resources begun during the R&D phase to continue during the design and fabrication phases of the detector project. However, SDC beam testing needs are dominated by the calorimeter tests, which we propose to concentrate at Fermilab in an 'SDC test beam'. Beginning in the last few years of this decade, we expect to fully utilize a dedicated SDC beam line at the test beam facility of the Medium Energy Booster (MEB) at the SSC Laboratory.

In the sections below we briefly summarize our plans for test beam usage. The schedule for test beam usage is necessarily uncertain, since it depends critically on the availability of beam time at key accelerators for which definitive long range schedules do not now exist. Furthermore, the need for future test beam studies a few years hence depends on the results of tests in the near future, and thus the exact need cannot be precisely predicted. Nevertheless we present below our best estimate of summary schedules for test and calibration needs during the construction of the detector.

2.2 Accelerator Facilities

Major facilities at Fermilab and eventually at the SSCL are proposed to be the primary focal points for test beam and later calibration beam work. Calorimeter test and calibration requires high energy beams that can only be provided now by Fermilab and CERN and later by the SSCL. We propose to base our operations in the next few years at Fermilab. Since much of the calorimetry module final assembly will take place at Fermilab and ANL, Fermilab is the natural test location. We plan that much of our other test beam needs can also be satisfied by sharing the beam line used for calorimetry tests and calibration at Fermilab.

In Table 2.1 we present a summary schedule of test and calibration needs by subsystem for the remainder of the decade. The schedule corresponds to the SDC detector subsystem development and calibration needs and may not correspond to the availability of beam time at the accelerator facilities. The test beam schedule is closely related to the schedule for construction of the detector and its installation.

2.3 Detector Subsystem Tests and Calibration

In the sections below we briefly describe the anticipated test or calibration needs for each detector subsystem. Since the calorimeter dominates the FNAL test program, we begin with a detailed discussion of the calorimeter program.

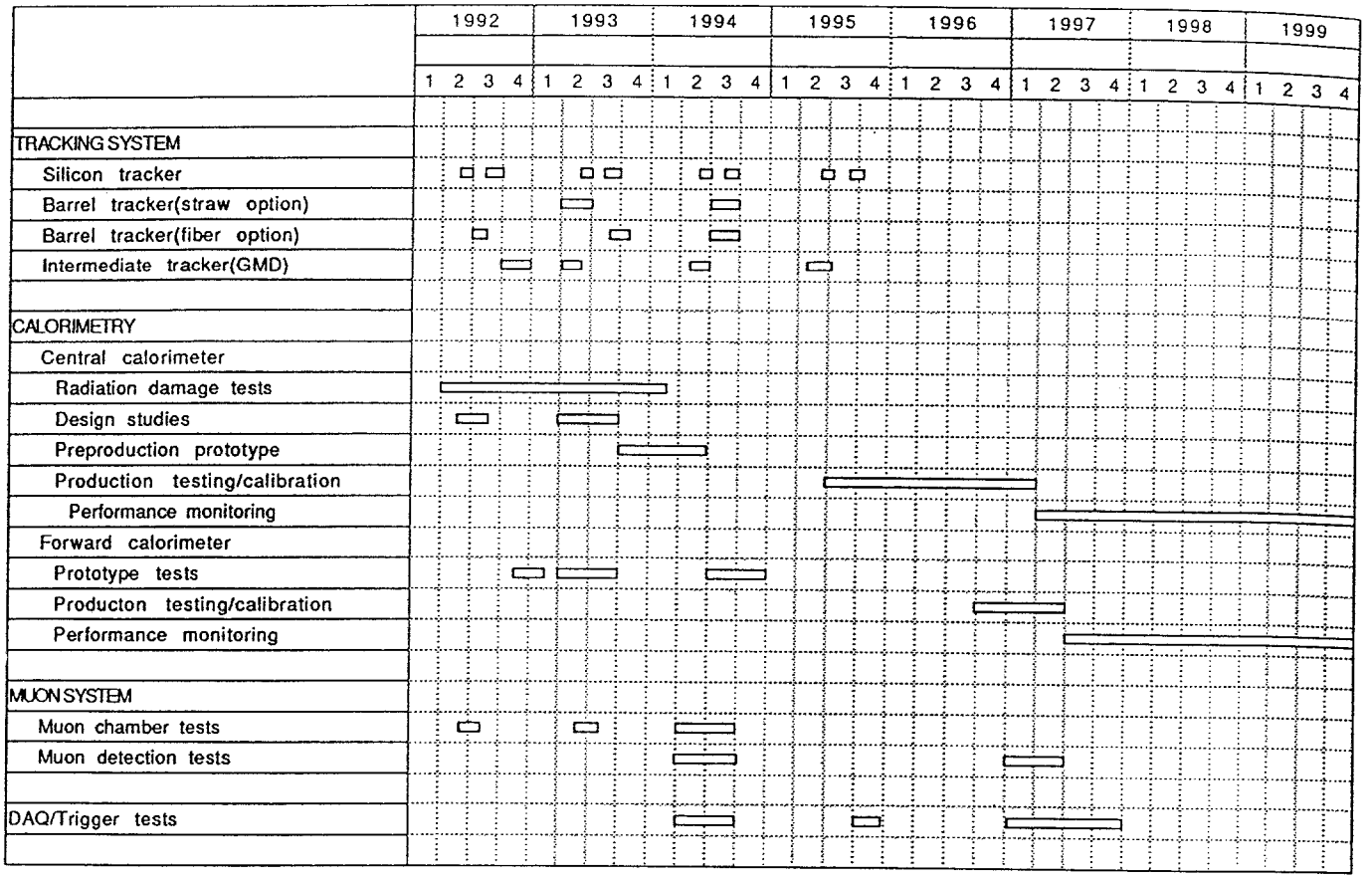

Summary of the preliminary schedule for test and calibration beam needs for detector subsystems.

Table 2.1

2.3.1 Central Calorimetry

Beam tests for the central calorimeter may be divided into four categories: (1) exposures of scintillators and small electromagnetic test modules to intense electron beams to measure radiation damage; (2) pre-production tests of prototypes to assess design; (3) testing and calibration of production modules ; and (4) continued calibration of modules to monitor long-term performance after installation of the central calorimeter.

2.3.1.1 Central Calorimeter Radiation Damage Beam Tests

Previous efforts by groups at Orsay, KEK and Beijing have concentrated on providing an existence proof for the survivability of the barrel calorimeter. Exposures of about 1 Mrad of low energy electrons were used to establish this. Doses appropriate to the endcap region are now being actively pursued. Tests will continue at KEK and Beijing up to the level of 50 Mrad. This dose represents 100-year operation at letal = 3 at EM shower maximum at the design luminosity. It is anticipated that electron beam tests will continue through 1993.

2.3.1.2 Central Calorimetry Prototype Tests

During 1991, beams at Fermilab were used to test electromagnetic modules, shower maximum detector concepts and hadron calorimeter modules. In 1992, tests of EM design concepts for the barrel and endcap were performed at BNL. The results of this series of tests were used in the middle of 1992 to define a pre-production prototype, and we plan to assemble a full scale barrel wedge prototype (~40 tons) in the latter half of 1993. This aggressive schedule of tests is needed if the production schedule for calorimeter modules is to be met.

Pre-Production Prototype Description

Figure 2.1 shows a schematic of the Pre-Production Prototype Barrel Wedge module, that we will be ready to test at FNAL in the fall of 1993. The schedule for production of the module is shown in Table 2.2. The absorber will be fabricated in China and the US, while the optical assemblies will be manufactured in Japan. The module will be assembled at FNAL. The absorber design has been fixed based on the 1991-1992 studies. Experience gained in 1993 from the fabrication of this pre-production prototype module will allow us to proceed to final design of the calorimeter absorber structure. We believe that the beam test results will not indicate any problems that will require change of this final absorber configuration.

The optical system and the quality assurance program associated with its production are still under development. The main elements of the optical system are the scintillating tiles with grooves, the tile assembly wrapper, the optical fibers with splice from wavelength shifting to clear sections, and the 'cookie' with longitudinal mask (if needed) that mates the fiber bundle to the photo tube. The aspects of this system being developed for the prototype mainly involve the details of cheap mass production techniques that give the required optical quality. The main steps envisioned for testing during assembly are bulk scintillator light output tests, tests of individual tiles after grooving (transverse masks are installed at this step, if necessary), tests of spliced fiber assemblies,

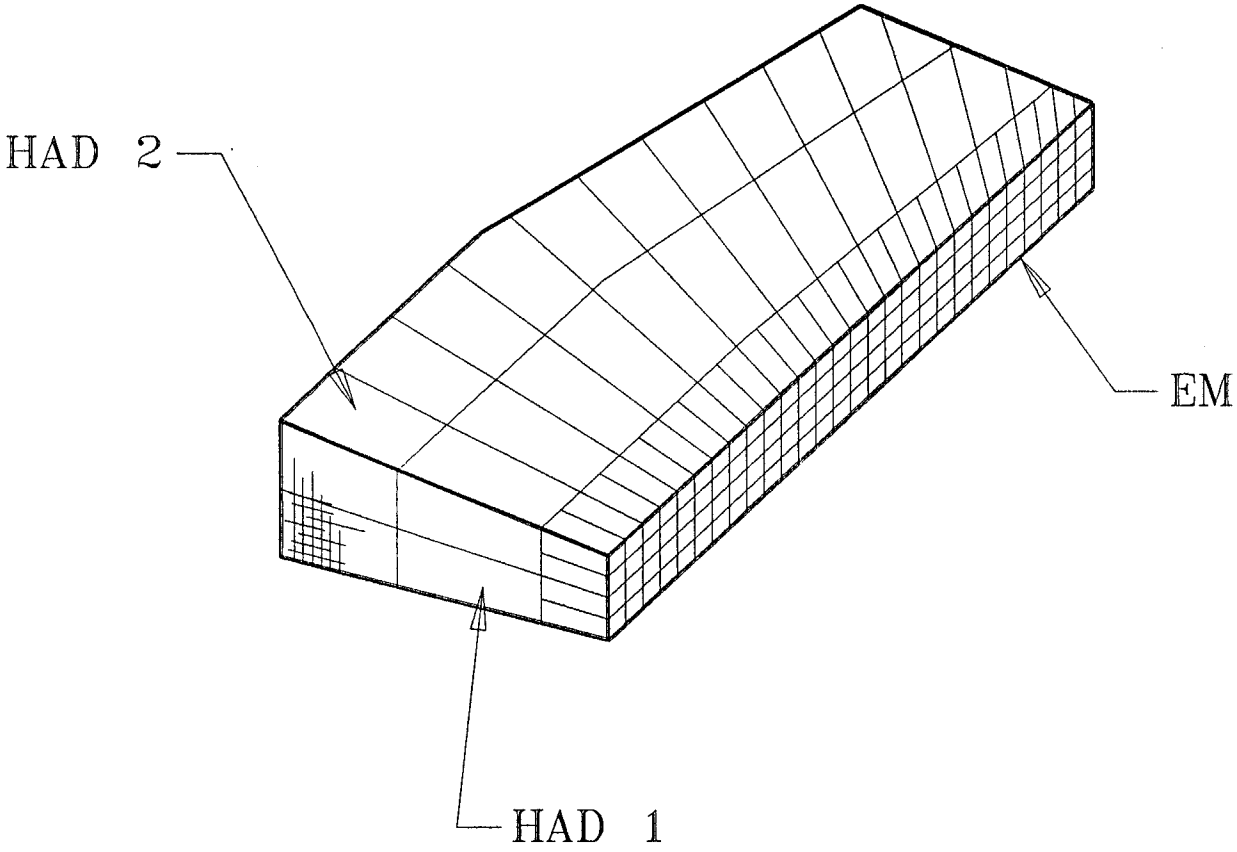

Figure 2.1 Prototype Barrel Calorimeter Module

SDC Calorimeter Barrel Prototype Schedule

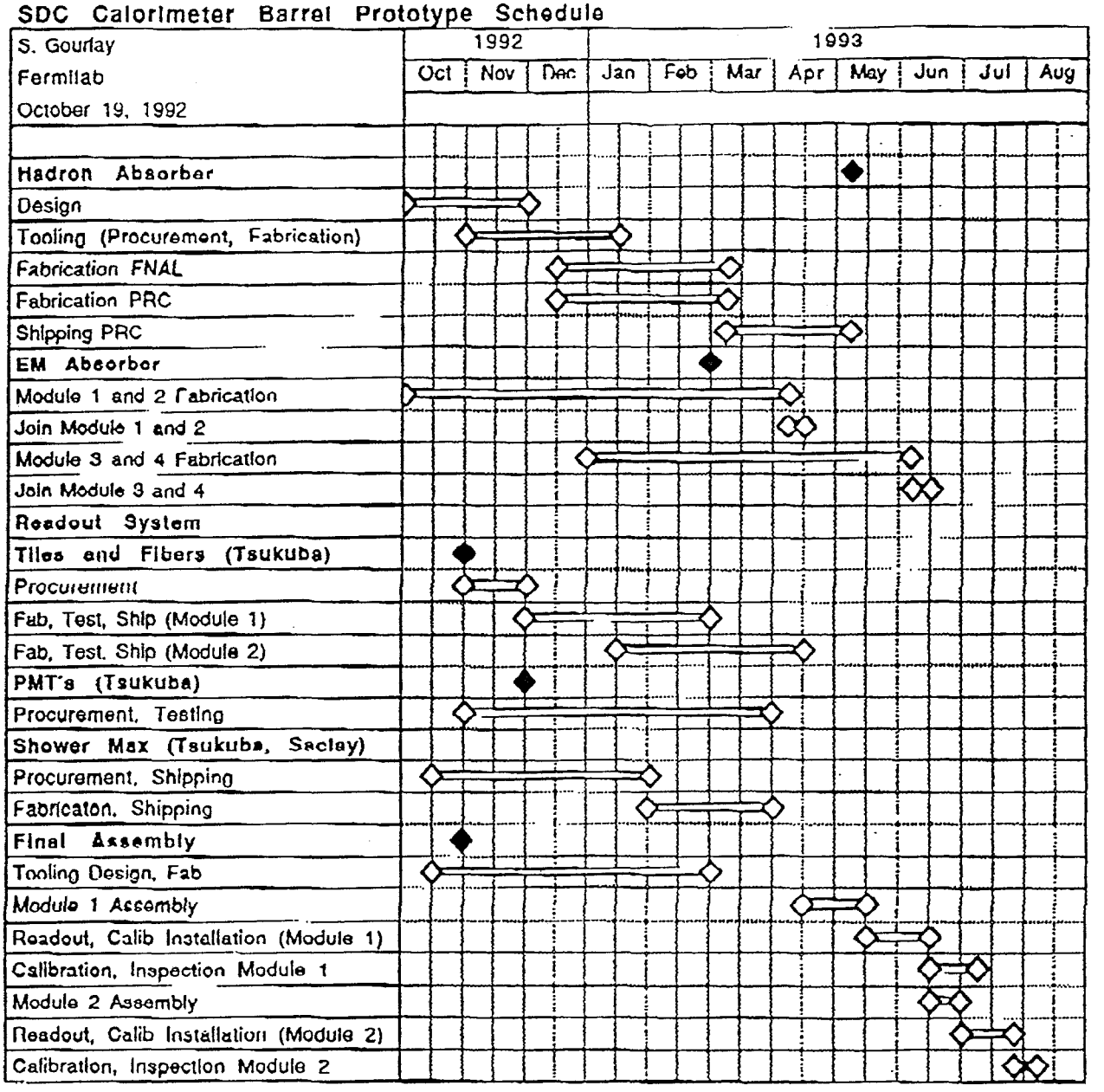

Table 2.2

and tests of the installed tile, fiber, and photo tube response by use of radioactive sources. Longitudinal masks are created and installed in the last step, if needed.

Initial cosmic ray tests and perhaps initial beam tests (depending on schedule) will be performed on the pre-production wedge with conventional electronics. We plan to have prototype versions of the full-speed electronics available in sufficient quantity to instrument the wedge by 1994. The full-speed electronics were not available in the previous test beam runs, so we will be able to check the system performance at very short gate times for the first time.

The pre-production prototype will be outfitted with a full complement of calibration systems, including the light flasher, enough source routing tubes to route a wire-driven radioactive sources near all tiles in the system, charge injection systems, and current monitoring circuits.

'94 Test Goals and Measurement Program

The main goals of the '94 pre-production prototype test are to validate the optical system design, including the associated quality assurance program, and to validate the full calibration system design. We hope by a careful series of measurements to be able to minimize the required quality assurance steps, and the scope of the calibration system in order to reduce overall costs.

Specific measurements to be made in 1994 include:

1) EM calorimeter linearity and resolution, including both stochastic and constant term contributions. Since the resolution has contributions from the overall light output, the absorber thickness, and the tile quality, such measurements provide a 'final' check of the optical system quality assurance program.

2) Hadron calorimeter single pion response and resolution. Details of the proposed compartment weighting scheme, especially at short gate time, require further study to verify the performance will be as expected. Resolution measurements also serve as a check on hadron compartment optical system quality, as in the electromagnetic case. High energy pions are needed for the linearity studies.

3) Short gate time studies. The calorimeter resolution and linearity for both electrons and pions should be checked at very short gate times. Any problems arising from combining data from multiple bunch crossings can then be addressed.

4) Transverse uniformity of response within individual towers. These studies, mainly with electrons, will again test the accuracy with which bench tests of the optical system predict actual beam performance. Detailed beam studies of the proposed 'sigma tile' design will be performed.

5) Study of the source calibration vs beam response. This is a critical study needed to determine how many permanently accessible source tubes will be needed. If the requirements in this area can be better understood, the need for later beam testing may be reduced.

6) Longitudinal mask to simulate radiation damage. This study, by inserting a mask at the 'cookie', will allow simulation of the expected radiation damage, and direct tests of the performance of various proposed correction schemes.

7) Shower max transducer selection verification. Based on further performance studies, we expect to select the readout transducer for the shower max tiles during this test.

8) Longitudinal (non) uniformity. By varying the masking at the 'cookie', the predicted impact of tile variations can be directly checked with data. This is important for setting optical system performance (quality assurance) requirements.

9) Crack Scans. While detailed studies of inter-module gaps and response are not foreseen initially, quick studies to confirm that 'hotspots' do not exist in the design will be made.

10) Cosmic connection. The connection between tower response measured by beam muons, source calibration, cosmic rays, and electrons or pions needs to be verified and understood. This will help determine how much testing can be done in cosmic ray test stands.

11) e/pi separation. Studies of electron and pion separation will be made to quantify the expected performance.

The above program of study is estimated to require altogether about 2000 hours of beam time, based on past experience with such work. As many of the studies can be performed at the same time, a detailed breakout of running times for each task group has not yet been made. We plan to have operations personnel at FNAL (led by Mike Lamm) that will manage the running to obtain the most information possible from the available running time.

2.3.1.3 Central Calorimetry Production Test - '96 Running

Much of the final assembly of the calorimeter modules will be based at FNAL and ANL. It is therefore natural that tests of these production modules be made at Fermilab. The precise number of modules requiring test remains to be determined, but some subset of the modules must be beam tested as a final quality check. High energy beams are required. For example, a 200 GeV electron beam would test the module uniformity and energy resolution at about the 1% level.

Barrel modules from the production assembly lines will begin to appear in late 1995 and will need to be tested. Endcap modules will undergo similar testing beginning in 1996.

'96 Test Goals and Measurement Program

The main goals of the '96 tests of production modules are to provide the "last-ditch" quality assurance of the module production. This mainly involves performing tests 1,2,4, and 5 mentioned in the previous section on the final production modules. This will also provide the opportunity to perform tests of any modifications made during the optical system final design and electronics final design.

It is difficult to estimate the precise testing needs in '96 until more is known from the first tests. Certainly, since modules will be fabricated at two production sites, any possible variation in fabrication will need to be checked by such tests. As module production is expected to extend over an 18 month period for both the barrel and endcap, a running time of about 2000 hours has been estimated to be needed during this time.

2.3.1.4 Central Calorimetry - Performance Monitoring

After the module production is completed, further tests of the calorimeter response will be made to carry out detailed boundary scans, such as response to electrons and pions at phi cracks, scans of the endcap-barrel boundary, etc. These studies are also estimated to initially require some 2000 hours of beam time.

2.3.2 Forward Calorimetry

The test beam program for the forward calorimeter will proceed in three phases; R&D, prototypes, and calibration.

Before a technology choice is made, both the high pressure gas and the liquid scintillator concepts will be studied using a series of small modules. Studies have already begun using small electromagnetic modules, and will continue with larger hadronic prototypes.

Different types of modules must be tested for response. Energy resolution, linearity, the effect of incidence angle and other features must be measured in high energy electron and hadron beams. The high pressure gas group intends to test a hadronic module at Brookhaven in 1993. The liquid scintillator group plans a series of tests at CERN that began in the latter half of 1992, starting with small electromagnetic modules, and progressing to hadronic modules in 1993.

Radiation damage tests must also be done, and a subset of the modules will be heavily irradiated. If necessary, these tests can be done using intense gamma ray and neutron sources, without using valuable accelerator test beam time.

Subsequent to the final choice of technology, several full-scale prototype modules will be constructed, and subjected to tests in a high energy hadron beam in 1994 or 1995. As modules of the final calorimeter are constructed, it will be necessary to calibrate at least a subset in a hadron beam. This will occur from 1996 onward. Even after installation is completed, beam studies will continue on the full scale prototypes to check the long term

stability of the calorimeter response, and to understand long term irradiation effects. These tests will be made during central calorimeter testing at FNAL and later SSCL.

2.3.3 Silicon Tracker

The development of the silicon tracker will be closely coupled with radiation hardness tests in a continuation of our ongoing three year old program at LAMPF at the Los Alamos National Laboratory. Beam tests to confirm and monitor the resolution of modules consisting of double-sided detectors, front-end electronics and readout systems will also occur.

The proton irradiations will consist of one or two week long runs per year during the running cycle of LAMPF, typically during the summer, from FY1992 to FY1995. With these irradiations, we will be able to check the radiation hardness of the double-sided silicon detectors, and the bipolar and CMOS front-end electronics at various stages of development and production.

In the prototype phase (1992-1993), beam tests in a KEK pion beam will be used to measure the resolution of the silicon detectors with the full front-end electronics chain, both before and after irradiation. In the pre-production phase (FY1994-FY1995), modules will be tested with emphasis on system issues. Two runs per year at KEK will be sufficient. Some tests may be foreseen at FNAL in this period depending on beam availability and need.

For the production verification/calibration phase (FY1996-1999) we do not foresee the need for beam tests, but will rely on laser/x-ray calibration systems to do the calibration and alignment tasks.

2.3.4 Straw-Tube Tracker

Most of the testing of the straw-tube tracking prototypes and modules can be done with cosmic rays. However, we plan to assemble a small number of prototype modules in a three or four layer arrangement for a systems test in 1993 at BNL. This test will be done with prototype electronics and will be used to verify the system response, measure resolution, and possibly high rate capability, depending upon the availability of a suitable beam. Additional tests are to be performed later at Fermilab to verify the performance of the design changes to the modules including trigger performance. Figure 2.2 shows the fixturing needed for the 1993 BNL test under design now.

2.3.5 Gas micro strip intermediate tracker

Beam tests of prototype gas micro strip tiles are planned at CERN in 1993. These tests are aimed at determining the pulse shape, time and spatial resolution, angle dependence, etc. of the prototype tiles fabricated in the United Kingdom or Canada. The test beam plan beyond 1993 depends upon the results of the initial tests. However, a systems level test may occur in 1994 and 1995, probably again at CERN.

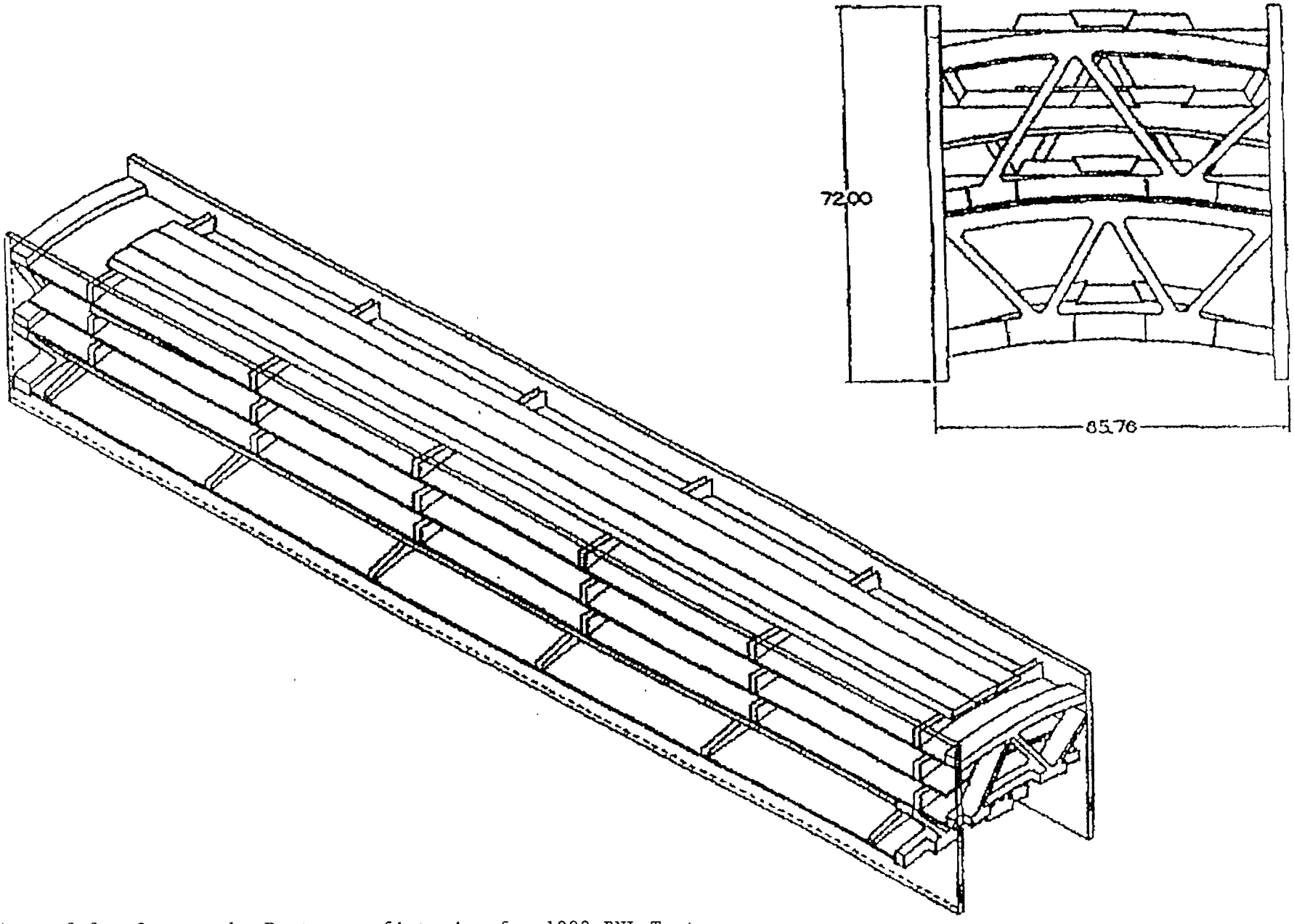

Figure 2.2 Straw-tube Prototype fixturing for 1993 BNL Test.

2.3.6 Scintillating fiber option

Radiation Damage Tests

While many radiation damage tests can be carried out using radioactive sources, there is always some uncertainty concerning the validity of such tests. Therefore, we plan to carry out radiation damage tests at Fermilab in the collider tunnel similar to the test that has just been completed, T-851. The environment within the tunnel is similar to that expected at the SSC. We expect these tests to be conducted almost continuously over the next 5 years, until 1997.

Other tests will include detailed radiation damage studies of the various elements of the tracker, such as the composite material of the support structure, glues for holding the fibers in place and the fibers themselves. These will be small studies and many can be carried out using sources. However, we expect that a number of small scale beam tests will be required. We may use a test beam at Cornell at the positron target starting in 1993 and again in 1995. There is a possibility of work in 1994 at KEK in Japan.

System Verification Tests

The major tests to be performed are:

1. A beam test was carried out at BNL starting May 1992 using a pion beam with energies up to 10 GeV/c. The purpose was a proof-of-principle test, using 128 channels of Hist III VLPC's. The photoelectron yield and resolution was measured for 3 super layers.

2. Production tests will be needed during fabrication to monitor the quality of the production processes, very similar to the straw-tracker requirements.

2.3.7 Muon System

Beam tests will be required to measure and evaluate the performance of the drift tubes and associated electronics, the trigger scintillation counters, and possibly the trigger Cerenkov counter modules.

Drift tube tests took place in 1992 at BNL and IHEP (Protvino). The 1992 tests measured only short tubes about 1 m long, and involved the round field-shaped drift tubes that are the basis of the barrel, intermediate and forward muon system conceptual designs. The design specifications require that these tubes have 250 micron single-track precision and 5 mm two-track resolution. Several sizes of tubes were tested, ranging in diameter from 4.2 cm to 9.0 cm. Several field-shaped, rectangular cells were also tested and compared in performance to the baseline design. Continued calibration of modules to monitor long-term performance and ensure uniformity of production will be necessary. Long term radiation damage assessments will also have to be performed, but likely can be done with radioactive sources.

In 1993-1994, tests of full size drift tubes (9m in length) will occur. The test facility must have the capability of full transverse motion for these tubes. At BNL, the test beam enclosure would require modification to accommodate such transverse motion. The current plans are to conduct such tests at FNAL during running of the "SDC Test Beam."

During 1995, tests may continue at Fermilab. In the period 1997-1999 tests of selected small modules consisting of many glued tubes (such as IW2) will take place at the SSCL.

The scintillation counters that will be part of the muon trigger will also require evaluation in a test beam. The Cerenkov counter design and performance may have to be verified in a test beam if it is decided to proceed with this option.

3.0 FACILITY REQUESTS

While the emphasis of the Fermilab test beam program will be focused on understanding the barrel and endcap calorimeter, we intend to test all the baseline detector prototypes outlined in Section 1.1-1.4. Given the ensemble of tests spelled out in Section 2.3, and the facility requests outlined below, it is clear that the SDC requires a high quality dedicated beamline and experimental hall at Fermilab. Based on these requirements and the anticipated experimental hall availability, it appears that the MP and MW beam line are the most likely candidates. SDC favors MW as it has the capacity to supply primary energy (800 GeV) hadrons and high energy electrons.

Additionally, we plan to construct a cosmic ray telescope, which should be in operation before the first prototype is complete (fall 1993). Experience from the Zeus Calorimeter, CDF Calorimeter, and fixed target calorimeter experiments such as the CCFR Detector have shown that cosmic ray tests can be extremely useful. Minimum ionizing particles can be used to map the uniformity of response in eta-phi as well as in the longitudinal track direction. These data can then be compared with source calibration data. This can be accomplished in the time prior to test beam running. In addition, bringing up a cosmic ray test stand will aid in debugging prototype electronics and the data acquisition system.

3.1 Beam Requirements

Our primary goal is to study the response of the barrel calorimeter to electrons and hadrons over a large dynamic range of momenta (10-300 GeV and beyond). Extending the range upwards allows for better calibration points for exploring compositeness, while extending the lower limit allows one to map out non-linearities in calorimeter response, and thus better estimate total jet energies. The low energy points are important because the fragmentation function D(z) peaks at low z, as 1/z. Therefore, a good multijet spectroscopic measurement requires mapping the calorimeter response down to low momentum.

For most studies, a beam intensity of 1-2 kHz over the entire dynamic range would be acceptable. At high energies (>200 GeV electrons, >400 GeV pions) rates as low as 1 Hz would still be useful. The beam should be tagged with one bucket time resolution by a system of 1 mm PWC augmented by scintillator hodoscopes. The momentum should be tagged to $dp/p < 0.5\%$ so as not to obscure the expected 1% (6%) "constant term" in the electromagnetic (hadronic) calorimeter energy resolution.

A high energy electron beam will be needed to uncover this constant term in the energy resolution. Mapping the electromagnetic constant term is the highest SDC priority. Other beam requirements are of lesser importance.

The spot size should be small, ≤ 1 cm radius, and should be tagged to a precision better than that expected by detectors placed at the electromagnetic shower maximum, ≤ 1 mm. Single wire drift chambers may be useful for this purpose.

In order to simulate SSC rates, 1 particle/bucket of diffractive 800 GeV protons (~50 MHz rate) would be useful. Fast detectors, which can resolve individual bunch

crossings at the SSC, must confront high speed operation. High rate operation is, however, not a crucial requirement for the test beam.

Since the response of the calorimeter to electrons vs. hadrons is a critical issue, we need to have a particle identification tagging capability. Tagging with a contamination of less than 1 part in 1000 is required. For electrons, this probably requires dedicated electron beam operation in addition to Cerenkov and/or TRD particle identification.

3.2 Experimental Hall Requirements

Based on the description below, the estimated required floor space is 35 m along the beam direction (longitudinal) and 20 m transverse to the beam direction. This is equivalent to 1/2 of the floor space of MW9 or MP9. This request does not include space for portakamps.

The building must be equipped with HVAC to maintain a maximum ~10°C variation throughout the run. Smaller environmental tents may be required for specific electronics applications. Other requirements such as electrical power should not exceed that of a "typical" fixed target experiment.

3.2.1 Calorimeter

For the initial program we will test two prototype barrel calorimeter wedges butted together in phi. All the barrel subsystems (EM, Preshower, Shower Max, HAD1, HAD2) with the latest available prototype electronics will be exercised during this test. As shown in Figure 3.1, these tests will be performed only in selected regions of eta-phi. A later test run would be devoted to testing complete production barrel and endcap wedge assemblies.

The test beam must be easily accessible to the entire front face (eta-phi surface) of the calorimeter, with the tracks passing projectively through the calorimeter. This is achieved by placing the calorimeter wedges on a specially designed "transporter" fixture. A conceptual drawing of the transporter is shown in Figure 3.2. The transporter is presently being designed to accommodate two barrel wedges and two end cap wedges, thus spanning 2 x 2pi/32 in phi and 0-3.0 in eta. This is achieved by two independent rotations in eta and phi. The eta rotation is done in the floor plane and is accomplished by rolling the transporter on the other three corners of the rectangular transporter fixture. The wheels are guided on a rail system whose center of curvature is directly below the pivot point. The phi rotation is accomplished through a rotation about the imaginary beam line axis. Both rotations are to be microprocessor controlled with controller and feed back loop information to be controlled by the data acquisition system. Much of the existing control system from the ZEUS transporter can be reconfigured for this task.

Figures 3.3 a and b show the preliminary layout based on a 8 foot beam height, with a plan and side view of the transporter with a barrel wedge. Figure 3.3a shows one side view with the transporter in its two extreme phi rotations.. The height of the wedge at its highest extension is approximately 4.1 m. At its lowest extension in phi, the transporter platform rests essentially on the floor. Figure 3.3b is a plan view demonstrating the eta rotation. Rotation throughout the entire eta range and beyond to move the wedge out of

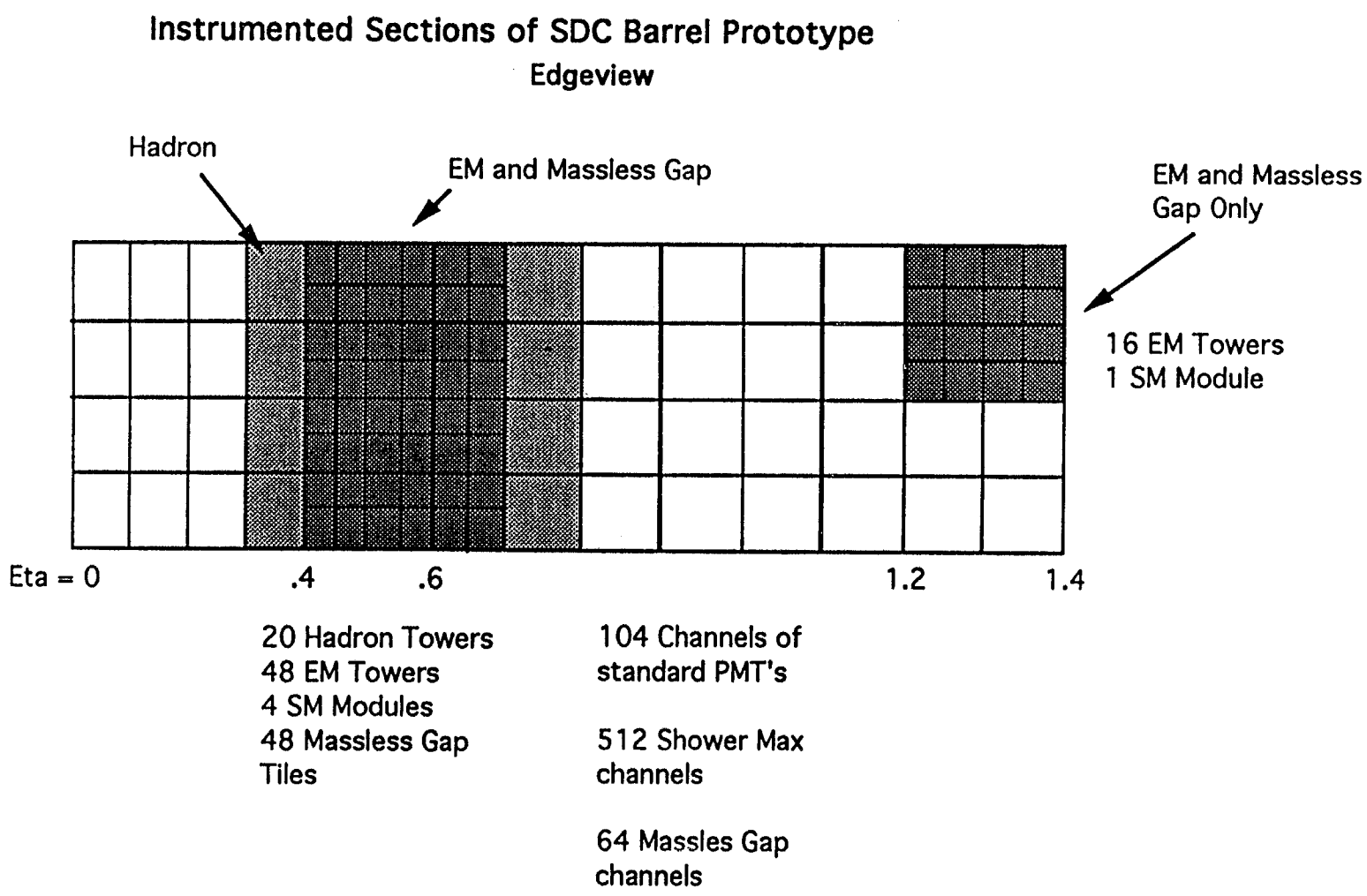

Figure 3.1 Instrumented Sections of SDC Barrel Prototype

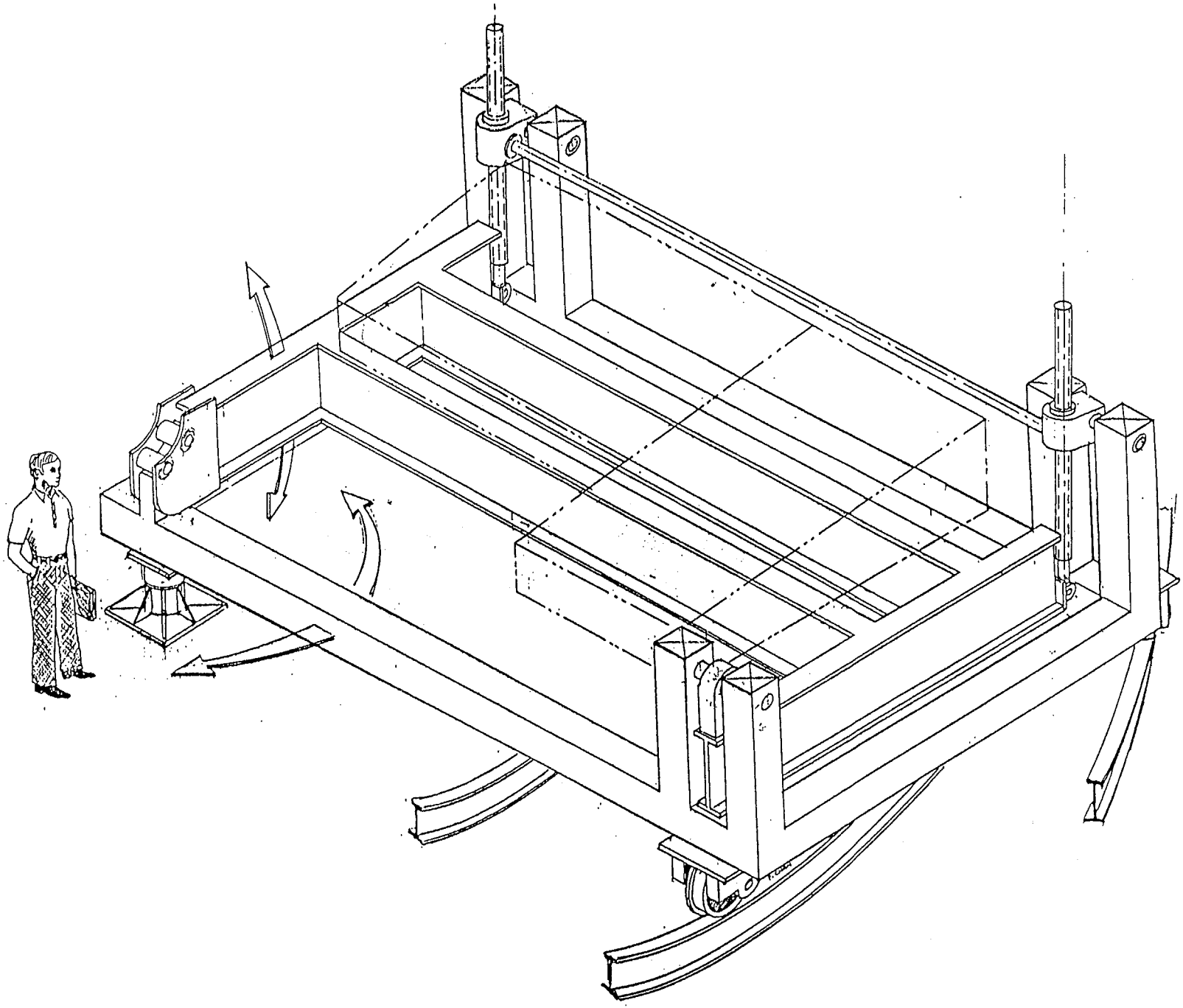

Figure 3.2 Conceptual Drawing of the Calorimeter Test Beam Transporter

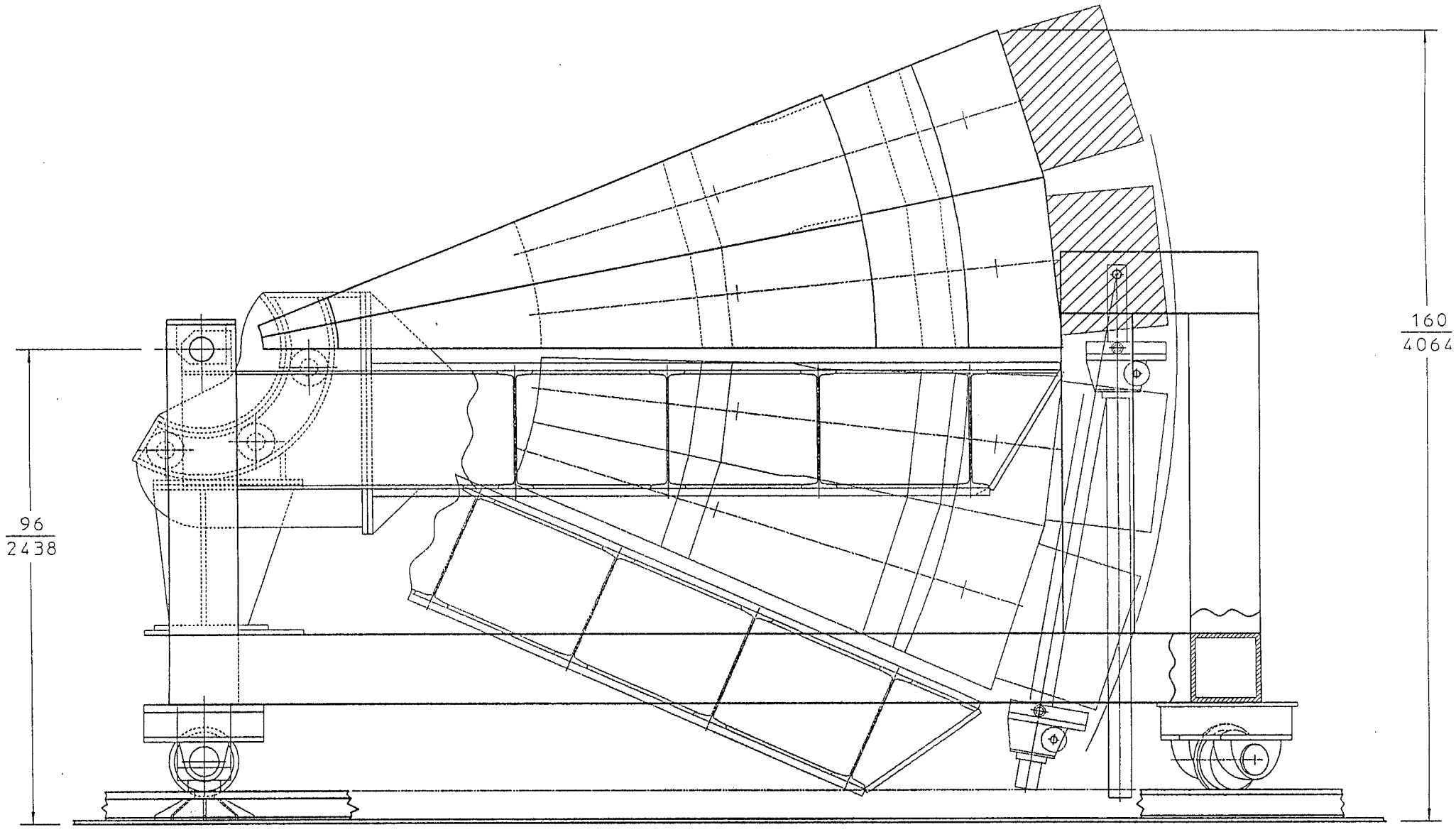

Figure 3.3a SDC Calorimeter Transporter Layout - Side View

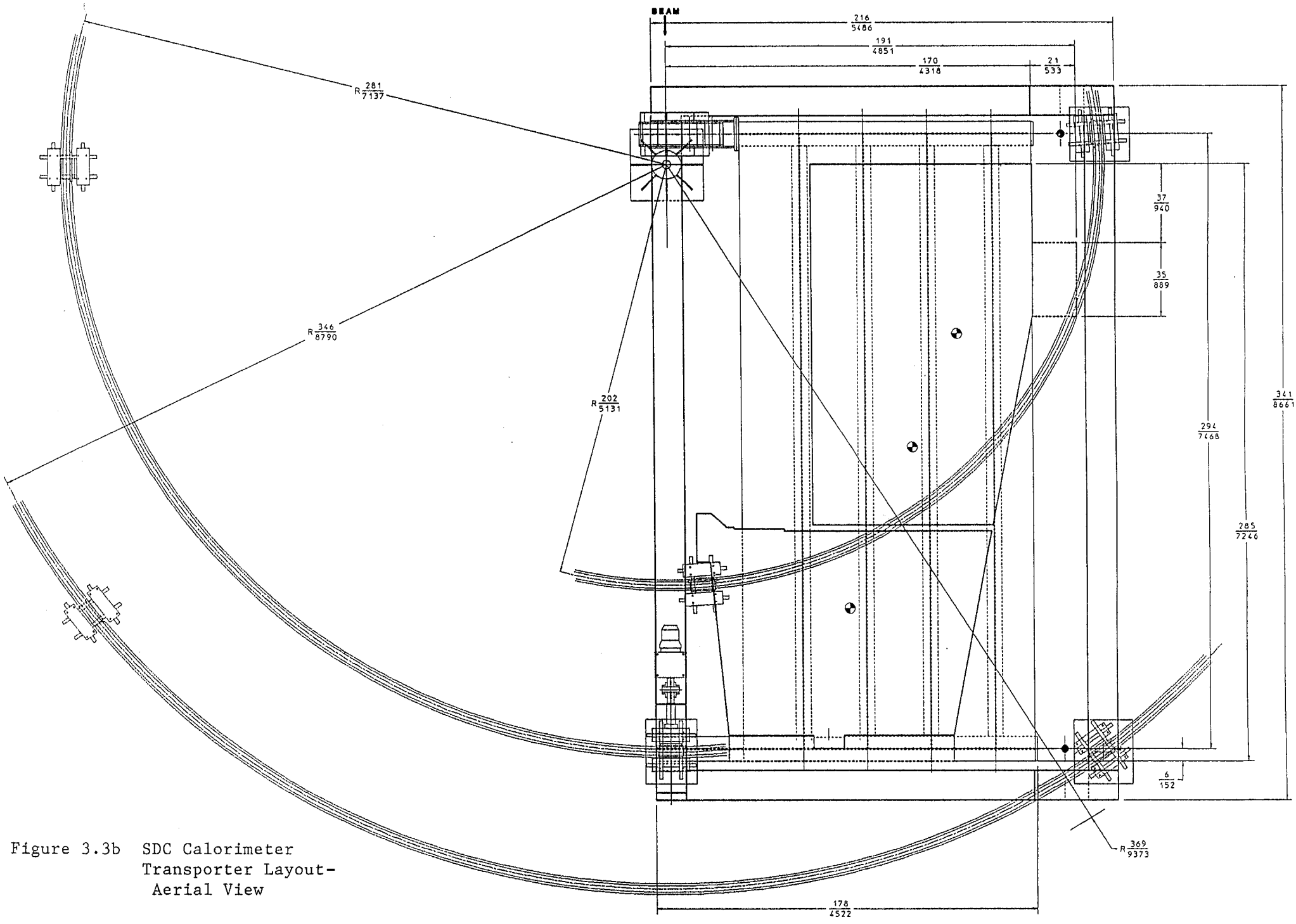

Figure 3.3b SDC Calorimeter Transporter Layout- Aerial View

the beam line requires a minimum clearance of 18 feet on the one side of the beam line, a minimum clearance of 30 feet to the other side of the beam line and a longitudinal clearance of 31 feet.

The weight of the transporter + two barrel wedges + two endcap wedges is expected to be approximately 150 tons. Additional floor reinforcements may be required to accommodate this weight depending on the ultimate beam line location assigned to the device.

3.2.2 Tracker

The central tracking station will require approximately 5 m (longitudinal) and 5 m (transverse) along the beam line. Additional 25 m^2 space off axis for setup and gas system will be required depending on which option is to be tested.

3.2.3 Muon Spectrometer

The muon system would consist of an iron beam stop followed by muon drift tubes interspersed with a iron toroidal magnet. The muon station including beam stop requires 6 m (longitudinal) and 5 m feet (transverse). Additional space off the beam axis will be required for setup, electronics and a gas system and the power supply for the toroid.

3.2.4 Cosmic Ray Telescope

Cosmic ray tests will be performed immediately after the completion of the first barrel calorimeter prototype. Our preference is to locate the cosmic ray test off the beam axis but as close to the calorimeter transporter as possible. This will simplify the rigging effort and allow us to share electronics and data acquisition resources.

A conceptual drawing of the telescope is shown in Figure 3.4. Approximately 100 m^2 space is requested for this cosmic ray telescope for the barrel calorimeter. A 10 m x 2 m space is needed for the calorimeter test stand and telescope. The additional 80 m^2 space is for electronics, gas system for telescope drift chambers, and setup area.

3.3 Control Room

The test beam site will need a DAQ control room area sized to about 4 portakamps. This would include 2 portakamps for electronics, 1 portakamp for computer and experiment control and 1 portakamp for offices. An additional 1-2 portakamps for electronic tech area and additional office/computer terminal space would be highly desirable. We would request that the control room be connected to the central computing via ethernet, and also connected to the standard accelerator and operations beam line monitoring systems.

3.4 DAQ, Software Support and PREP Support

Prior to running of the test beam, we intend to start cosmic ray testing in our experimental hall. We request PREP support for these tests. The cosmic ray telescope readout will be CAMAC based TDC's (LeCroy 4290) and Nanometric Amp/discriminator

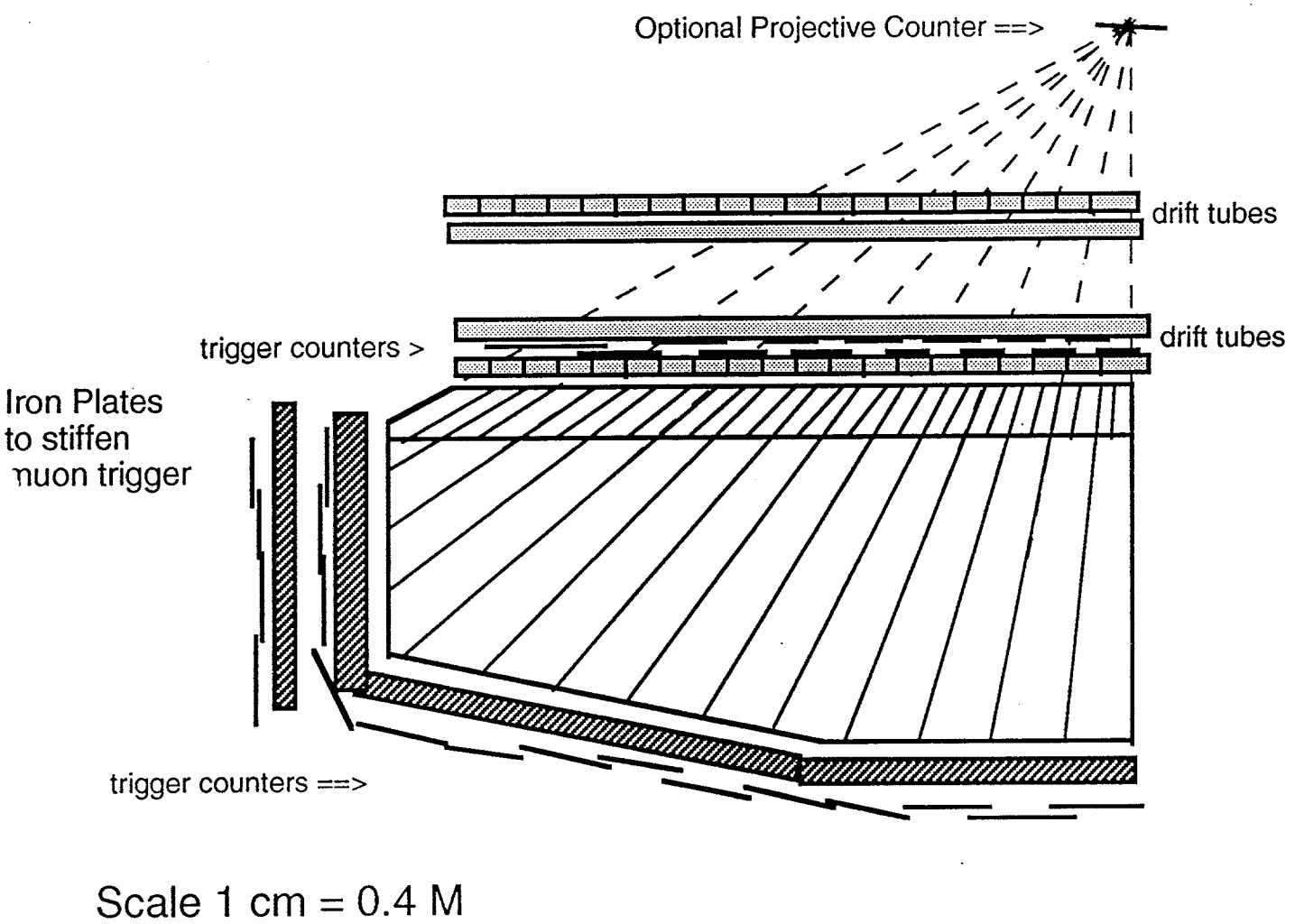

Figure 3.4 Conceptual Design for Barrel Calorimeter Cosmic Ray Telescope

cards. The cosmic ray trigger counters (and possibly the calorimeter phototubes before prototype electronics is available) will be read out through CAMAC based ADC's. Trigger logic will be NIM based discriminator and logic units. Most other readout systems will be prototypes for the SDC detector and hence will not require additional Fermilab PREP support.

We plan to use a UNIX platform with CAMAC and VME bus extensions for our DAQ system. This system will be supplied by the SSCL. Online software will be written by the SDC portable data acquisition group (PDAQ).

For the actual beam tests, we anticipate the need for additional PREP support for beamline monitoring, and beam tagging. Front end electronics PREP support may be required initially for those subsystems whose initial prototype electronics are not yet available.

We anticipate that the test beam DAQ will be an extension of that developed for the cosmic ray test. Support from Fermilab DAQ groups may be required to make use of Fermilab beam line instrumentation and PREP supplied electronics.

3.5 Facility options

We consider the suitability of the two available beamline options.

3.5.1 MP/MP9 option

Several modifications to the beamline and experimental hall will be required in order to use this facility for test beam.

Beamline

The MP beam line was designed to transport polarized protons, produced from the decay of Λ^0's. These Λ^0's were, in turn, produced at essentially zero degrees by 800 GeV proton interactions on a beryllium target. Charged secondaries and non-interacting primaries were swept into a target dump with a series of dipole magnets. The Λ^0's pass through a hole in the beam dump after which the proton from the Λ^0 decay was momentum selected and transported to the MP9 experimental hall.

For several reasons, the existing MP beamline would have to be significantly redesigned for test beam operation:

1) MP beam line cannot operate in a charged beam mode. The targeting angle must change so that zero degree primary protons can be dumped, while wider angle lower momentum particles can be transported. Note that changing the target angle from 0 degrees would diminish the yield of high energy electrons for transport.

2) The beam line is limited to the transport of < 200 GeV momentum particles. Since momentum tagging up to 600 GeV particles with .5% resolution is desired, there may not be enough integral Bdl and/or lever arm to do this with existing elements in the beam line under any rearrangement.

3) Because of the calorimeter transporter constraints (there must be >18 feet from the transporter pivot point to the west wall in MP9, the beamline must be translated approximately 2 feet to the east.

Thus, most if not all existing beamline elements would have to be moved and resurveyed. Additional elements may be required. Because this is essentially a new beam line, we would be required to do a complete re-evaluation of the radiation safety. This evaluation may reveal that a significant beam line shielding upgrade will be required. We are working with Anthony Malensek, the MP beam line physicist, to evaluate this beamline redesign and the associated costs.

Experimental Hall

Figure 3.5 shows a possible layout of MP9 with the anticipated test stations. At present the MP9 experimental hall contains a great deal of equipment from previous experiments. This includes the "Siberian Snake" polarity changing dipole beam, cryogenics from a helium target, parts of an analysis magnet, approximately 60 linear meters of 1 m shielding blocks, portakamps, cable trays and electrical conduit. Most of this existing apparatus in the MP9 experimental hall, especially in the upstream 30 m, will have to be removed.

Because this is a new beam line, and because most of MP9 is above ground, there may be significant radiation shielding problems that will need to be addressed.

The 25 T crane capacity will be inadequate for the rigging of the 40 T calorimeter wedges. Rigging requirements for the prototype will be minimal and can probably be accomplished through "portable" cranes and hoists. The rigging will be a much more significant issue for a future production beam test, since there will be a total of 64 barrel wedges.

There is an additional problem, related to the rotation of the tranporter, that must be taken into consideration. In the plane of the experimental hall floor, the transporter pivots on one corner of a 5.5 M x 9.1 M rectangle. This transporter is shown schematically in Figure 3.5. At eta = 0 (the *dashed* outlined rectangle), the longer side of the transporter is perpendicular to the beam line and roughly defines the minimum clearance needed from the beamline to the *farthest* wall. At a rotation beyond the maximum eta (the *solid* outlined rectangle) the shorter side of the transporter rectangle is perpendicular to the beam line and roughly defines the minimum clearance needed from the beamline to the *nearest* wall. As shown, the wedge rotates counter clockwise as the beam goes through increasing regions of eta. This rotational "sense" is required because the longer side of the transporter will only fit on the "beam right" side of MP9.

Unfortunately, the opposite is true of the SDC experimental hall at the SSCL as shown in Figure 3.6. The longer side of the transporter will only fit on the "beam left" side of the hall. In order to accommodate both beam hall requirements, either two separate transport fixtures will have to be built or the transporter will have to be redesigned so that it can be pivoted from two corners. This will require a considerable increase in the transporter design complexity (and hence a considerable increase in cost). The designers of

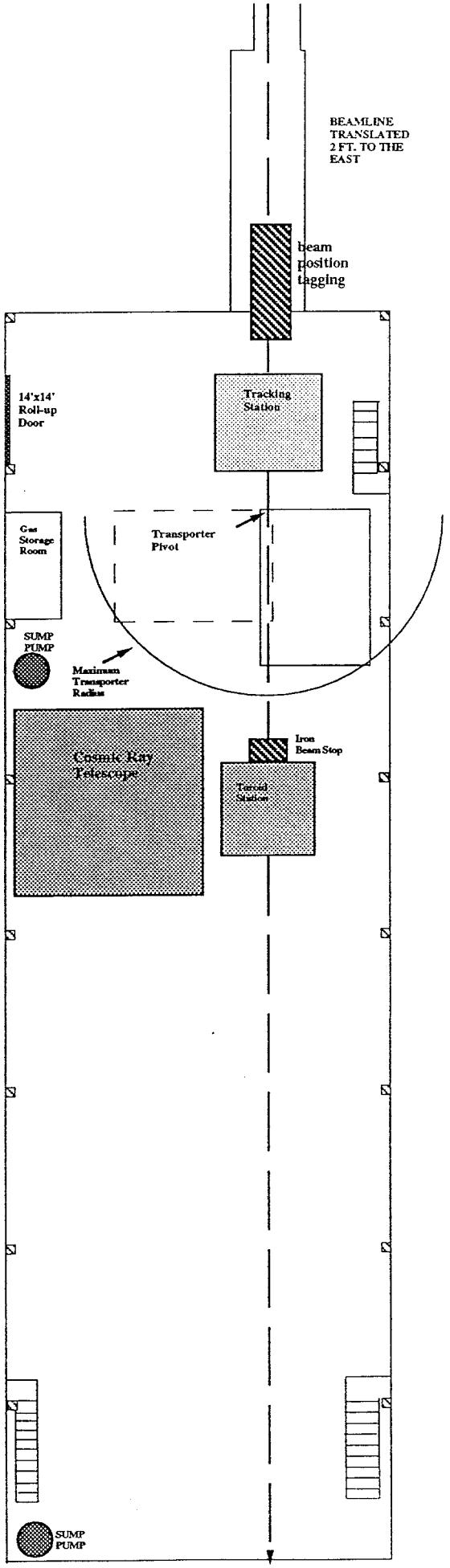

Figure 3.5 Possible Setup for MP9 Beam Tests

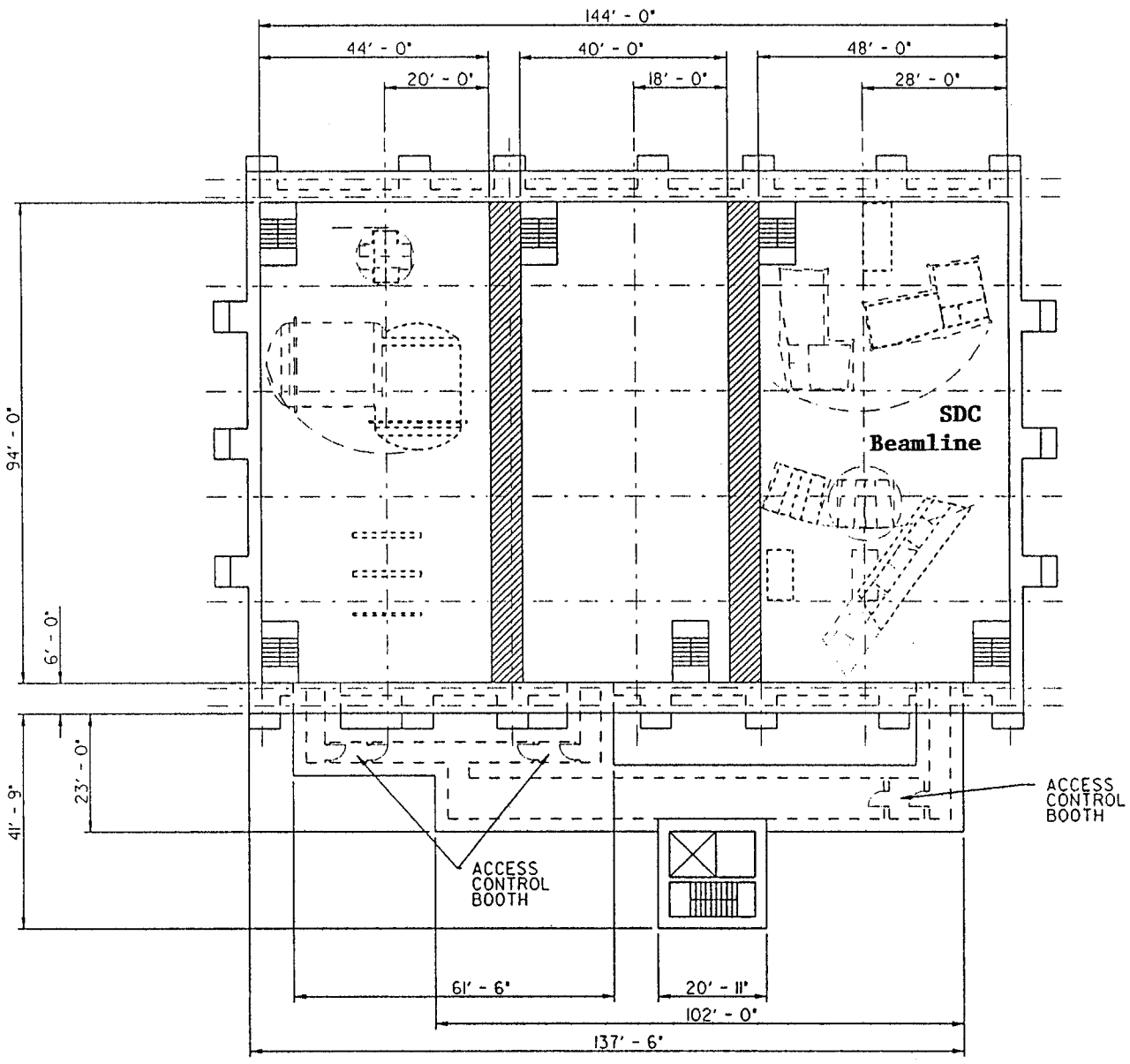

Figure 3.6 SSC Test Beam Experimental Halls

the transporter at LBL are evaluating each option. We are working with FNAL Research Division personnel to estimate the incremental costs due to experimental hall modification. (See Section 5)

3.5.2 MW/MW9 Option

The MW option is attractive because the beam line is already capable of transporting high momentum hadrons. Furthermore, the beamline position in the MW9 hall means that no major modifications to the transporter are necessary for future use at the SDC test beam hall at the SSC. Thus, MW is the beam of choice for SDC.

Beamline

The MW beamline design is well suited for transporting high momentum pions. During previous fixed target runs, +500 GeV/c pions have been used in MW9. Some changes will be required for a dedicated electron beam. Upgrades and possibly a beamline redesign may be necessary to satisfy Fermilab radiation safety standards. Some of the radiation safety problems will be ameliorated by the lower beam intensities required for test beam operation. If required, SDC would be willing to run at lower intensities.

Experimental Hall

Figure 3.7 shows a possible setup for the SDC test in MW. The setup is essentially the same as that of MP9. Since the beamline is closer to the beam left side of the experimental hall, the rotational sense of the transporter is identical to that of the SDC test beam experimental hall. Thus, the Fermilab transporter can be used in both locations with little or no modifications.

Note that the apparatus is shown in the downstream portion of MW. In this scenario, the analysis magnet of the E706 apparatus could be used as part of the beam momentum tagging.

Like MP9, MW9 is equipped with a 25 T crane. Hence, the problem of rigging a 40 T calorimeter wedge also applies. We are working with Roger Tokarek, the MW beamline physicist, to evaluate incremental beamline costs. FNAL Research Division personnel are aiding us in estimating incremental costs in the experimental hall.

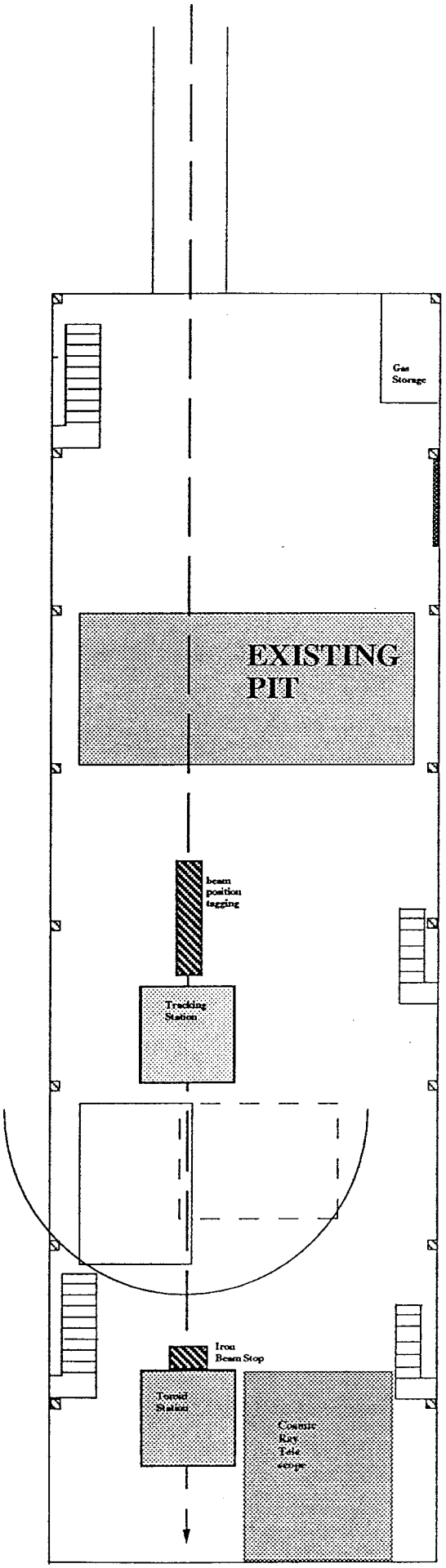

Figure 3.7 Possible Setup for MW9 Beam Test

4.0 SAFETY ISSUES

The SDC intends to act in strict compliance with FNAL safety standards. Nevertheless, the SDC will require review and certification of its apparatus and procedures. The SDC intends to cooperate fully in the ES&H safety review process.

Scheduling Safety and Other Coordination Issues

The SDC will have a test beam coordinator continuously on site at Fermilab. This coordinator will be the contact person between SDC and Fermilab in matters of safety, scheduling, and other issues related to the use of the test beam facility.

Through this coordinator, the collaboration will keep the Fermilab Program Planning Office appraised of current activities and of long and short term scheduling needs. In addition, the coordinator will the the SDC contact person in matters of safety.

We currently see as issues for safety review the following items:

Mechanical Safety: Transporters which accurately position large and small detector modules.

Flammable gases: Use in wire/gas detectors.

Electrical Hazards: AC power wiring. High and low voltage DC power.

Radiation Safety: Controlled access to beam line enclosures. "Spray" from beam particles incident on calorimeter modules or absorber walls. Use of radioactive sources for monitoring purposes.

Material Handling Hazards: During installation and maintenance, the movement of large components present unique hazards.

Structural Hazards: Large, heavy components need to be adequately supported for all anticipated stresses.

Table 5.1 Estimated Cost Breakdown for Test Beam Operation in MP Beamline*

Item	Estimated Cost	Comments
MP9 Stripout	$120-150K	Removal of All Exisiting Apparatus Including Portakamps
MP9 Installation	$100-150K	Floor Loading Upgrade, Appartus Installation and Survey, Electrical Reconfiguration
Portakamps	$100-200K	Range from reusing existing trailer with no plumbing/sewar to fully equipped supplied by GELCO
Beamline Upgrade	$200-300K	Includes Beamline Redsign beyond Preliminary Concept Beam element Reconfiguration, Resurvey, Electrical Rework
50 T Crane Upgrade (Portable OR Building Crane)		
Portable Crane	$140-250 K	$2K/day including rigging crew at 70-125 days including prototype and production tests
Building Crane Upgrade	$250-450K	Additional 25 T crane +spreader bar vs New 50 T crane
Total	$660-1250K	

* Best available estimates as of 1/6/93 from Jim Volk (FNAL) and other RD personnel.