national accelerator laboratory

TM-305
2910

THE DUMP-BOX FOR THE NEUTRINO AREA

M. Palmer and R. Stefanski

May 1971

INTRODUCTION

Some of the experiments that will be done in the Neutrino Area require a high power beam-dump at the downstream end of the decay pipe. A dump-box will be used to house the beam-dumps and associated radiation shielding. This report summarizes the specifications and design of the dump-box. The four areas covered in this report are: (1) general discussion of the hadron shielding, (2) beam-stop and shield modules for the dump-box, (3) the loading of the dump-box and (4) the vacuum system.

Hadron Shielding

The hadron shielding requirements can be discussed as transverse and longitudinal requirements separately. The longitudinal requirements are two-fold: (1) to protect enclosure 100 from a direct exposure to beam hadrons and (2) to attenuate the entire hadron cascade flux. The transverse shielding must be sufficient to maintain m.p.l. levels for radiation workers outside of the earth berm.

The transverse dimensions of the dump-box are determined by the requirement of preventing the beam from getting directly into enclosure 100. Therefore, the internal dimensions

Operated by Universities Research Association Inc. Under Contract with the United States Atomic Energy Commission

of the box are made large enough to house a load that can shield the entire face of the decay-pipe. Since the decay-pipe is 36" in diameter, this requires a box that is at least 36" square. In addition, a one-inch clearance for the load is required on all four sides. The box will, therefore, be 40" x 40" and the load 38" x 38". The one-inch space between the load and the box is masked by the earth berm: Particles can enter this space only after passing through a considerable amount of earth or by scattering out of the beam dump. The earth mask is also used to protect cast steel wheels and other elements that cannot withstand direct exposure to the full proton beam. Figure 1 shows a profile of the dump-box, and Fig. 2 gives a plan view of the dump-box and enclosure 100.

The dump-box will be long enough to accommodate high power beam dumps and hadron shielding to control the level of induced radioactivity in enclosure 100. The beam stops and hadron shields will be made in five-foot long modules. The beam-stops constitute the front end of the hadron shield and they are backed up by steel modules to complete the hadron shielding. Calculations show that ten feet of iron shield is required to keep the level of radiation in enclosure 100 at about four Rem/hr during beam operation.[1] An additional ten feet is needed for the aluminum beam-stops. The box extends into enclosure 100 another four feet. This end of the box is used for water, gas, electrical and vacuum connections. The total length of the box, therefore, is twenty-four feet.

The transverse shielding is made up of the earth berm

and the steel walls of the dump-box. The earth berm is 100 feet wide at the base and twenty feet high. The dump-box is surrounded by layers of one foot steel blooms, which form a steel wall around the box. This shielding should suffice to maintain radiation levels below 2 mrem/hr at the foot of the berm.[1] The earth, steel and heavy concrete on the bottom also help to shield enclosure 100.

Beam Stops and Neutron Shields: Alignment and Utility Access

The beam-stops and shield modules will weigh as much as 12.5 tons each. This poses a problem in regard to steering and aligning the modules as they are inserted into the box. Figure 3 shows a profile view of a shield car in the dump-box and illustrates the method of solution chosen. Cast steel wheels will be used and they will roll on steel strips and rails. This minimizes the coefficient of friction between wheel and floor and thereby minimizes the force required to move the module in and out of the box. The angular rail and groove combination is used to steer the modules: This method should allow alignment of modules relative to each other to a precision of 1/16".

Utilities are brought into the box from enclosure 100. Figure 4 shows the connections made at the top of the box. Vacuum feed-through connectors are mounted on a steel plate. The plate contains a groove at the edges which holds a rubber "O" ring. The vacuum in the box supplies sufficient force to hold the plates in place. The water connectors are "quick disconnect" to minimize spillage of activated water during disconnect.

The electrical connectors are used to carry pulses and supply voltage to monitoring equipment, such as split ion-chambers, SWIC chambers and thermocouples. The gas-feed-throughs can be used to supply special gas to a SWIC, or to exhaust radioactive gases from the beam-stop.

A sump area is provided at the entrance of the dump-box as is shown in Fig. 5. This sump is used to collect any spillage of activated water that might occur. Heat exchangers for the beam-stop will be located near this area to make use of the same sump.

Water cooling is provided for the inner box as shown in Fig. 1. Since these tubes are not in vacuum, the connections can be made directly from enclosure 100. This water can use the same heat-exchangers as the beam stop cooling water.

Loading of the Dump-Box

The loads inside the dump-box can be as much as 2.5 tons per foot along the length of the box. In addition, the outer box carries the load of the steel blooms and earth berm above the box. The foundations that carry this load were designed by DUSAF. The box supports rest on a concrete bed on top of the glacial till. The heavy concrete beneath the box does not serve to support any of the load: It is only used for neutron shielding. Figure 1 shows the foundations for the dump-box.

The inner-box is designed to be free of distortion under load. For the loads anticipated only very slight deflections should occur in the walls of the box. A situation should never occur in which a load would get jammed because of a twist or

sag in the box.

Vacuum System

The dump-box will operate at the same vacuum as in the decay-pipe to avoid the need of a three-foot diameter vacuum window at the upstream end of the box: Maintenance of a window of this type would be impossible because of its inaccessibility. In addition, maintaining the vacuum in the decay-pipe through a window would constitute a safety hazard to personnel working in enclosure 100 and at the dump-box.

The vacuum in the decay-pipe will be achieved by pumping on the downstream end of the dump-box. As a consequence, access to the dump-box requires breaking vacuum in the decay-pipe. A twenty-four hour pump-down time is required for the decay-pipe, but this should not appreciably hinder the operation of the area: Access to the dump-box should be required only infrequently.

The vacuum feed-through connections were described in the section on beam-stops and shield modules. The vacuum inlet connection is also shown in Fig. 4. The vacuum pipe leading to the pumps will be eight inches in diameter. The impedance of the beam-stops and hadron shields should not affect the pumpdown time of the decay-pipe.

Figure 6 illustrates the vacuum door that will be used on the dump-box. The five-inch diameter ports will be used to bring out the hadron and muon beams. The ports are terminated in gate valves, which are considered safer than vacuum windows for this application. Vacuum pipes from the beam lines

can be connected directly to the gate valves or thin windows can be mounted downstream of the gate valve. The gate valves will be pneumatically operated to close if a leak is detected downstream of the dump-box. The door will be mounted on overhead rollers and will be pushed to one side for access to the dump-box.

SUMMARY

The shielding requirements for enclosure 100 are similar to those of the Front End Enclosure of the Meson Area. Therefore, to expedite the development of the Neutrino Area a solution similar to the target-box[2] of the Meson Area was adopted. The dump-box, however, is somewhat simpler in design due to its much shorter length of twenty-four feet. Since the undercarriage of the load remains in the box during operations, simple alignment procedures were developed for the expected loads. And, since the box is so short, we will be able to vacuum test it before installation.

References

[1] 200 GeV Accelerator Design Study 1965, Vol. I, Sec. XII.

[2] J. H. Grimson, J. F. Lindberg, A. W. Maschke, J. R. Simanton and J. P. Simon; Proceedings of the 18th Conference on Remote Systems Technology, 1970, page 135.

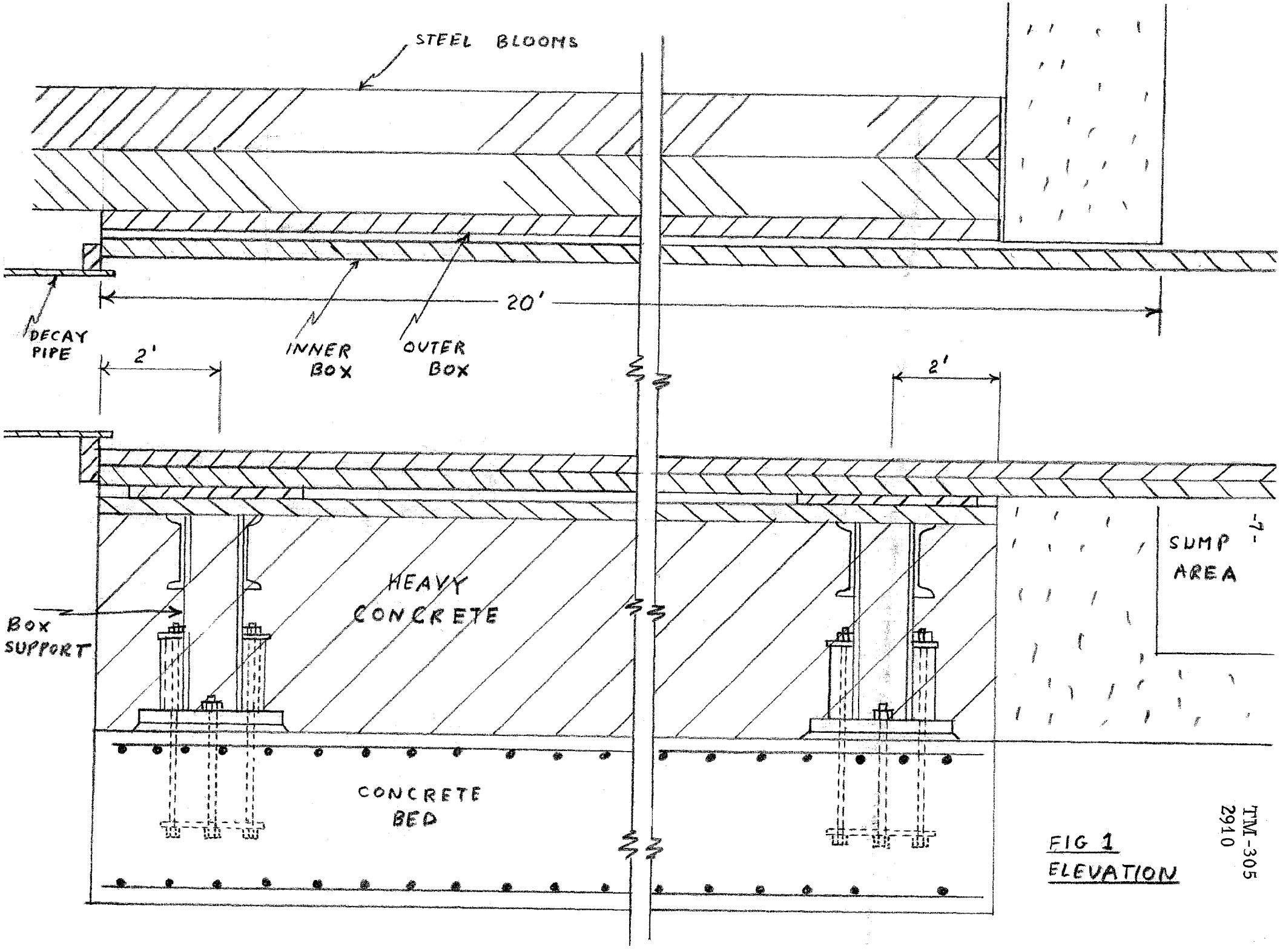

FIG 1
ELEVATION

NATIONAL ACCELERATOR LABORATORY ENGINEERING NOTE	SECTION	PROJECT	SERIAL-CATEGORY	PAGE
	EXP FAC	N AREA	TM-305	8

SUBJECT	NAME	
DUMP-BOX PROFILE	R STEFANSKI	
	DATE 5/21/71	REVISION DATE

FIG. 1 PROFILE

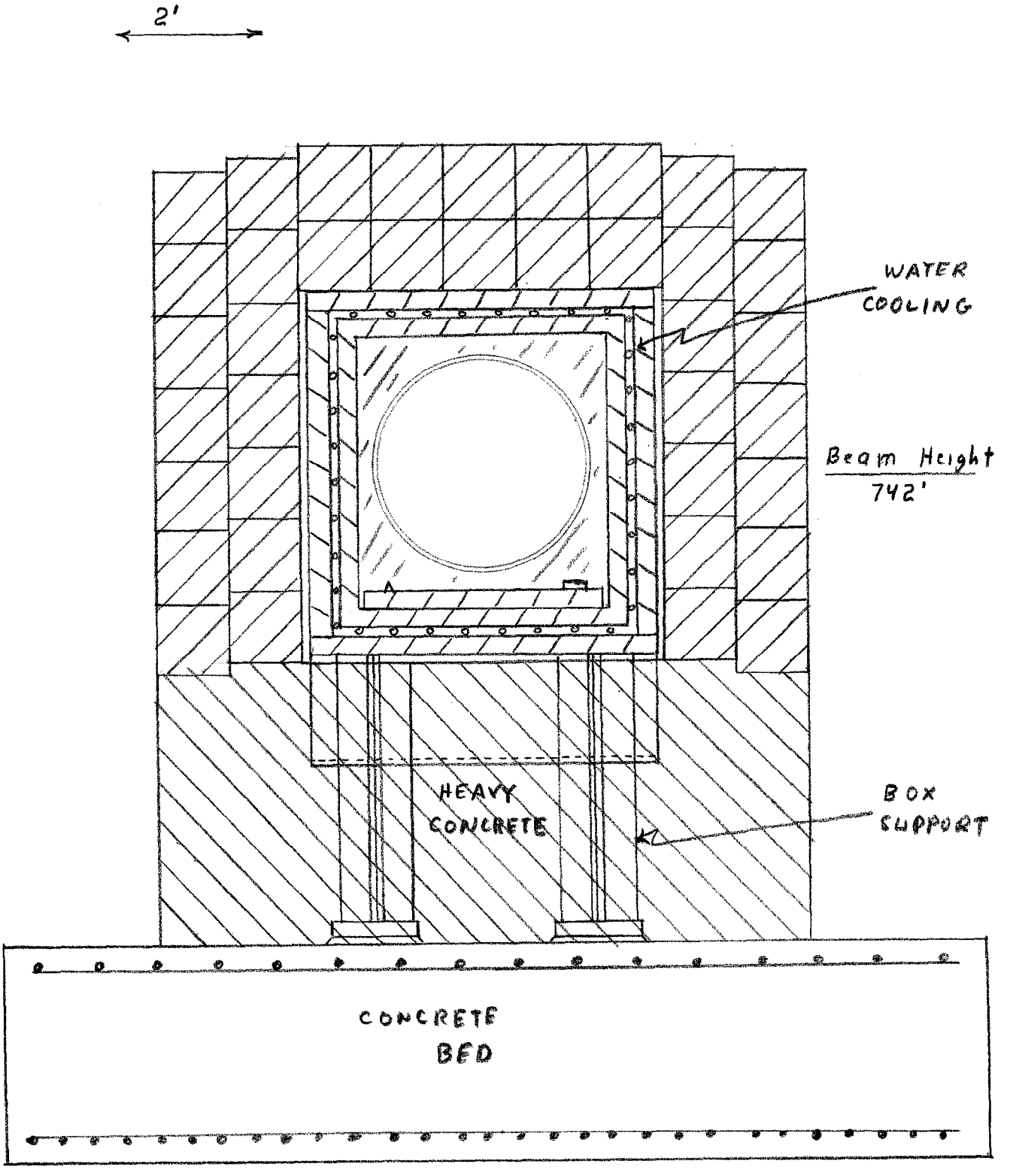

NATIONAL ACCELERATOR LABORATORY

ENGINEERING NOTE

SECTION	PROJECT	SERIAL-CATEGORY	PAGE
EXT FAC	P AREA	TM-305	9

SUBJECT: DUMP-BOX AND ENCLOSURE 100

NAME: R. STEFANSKI

DATE: 5/10/71

REVISION DATE:

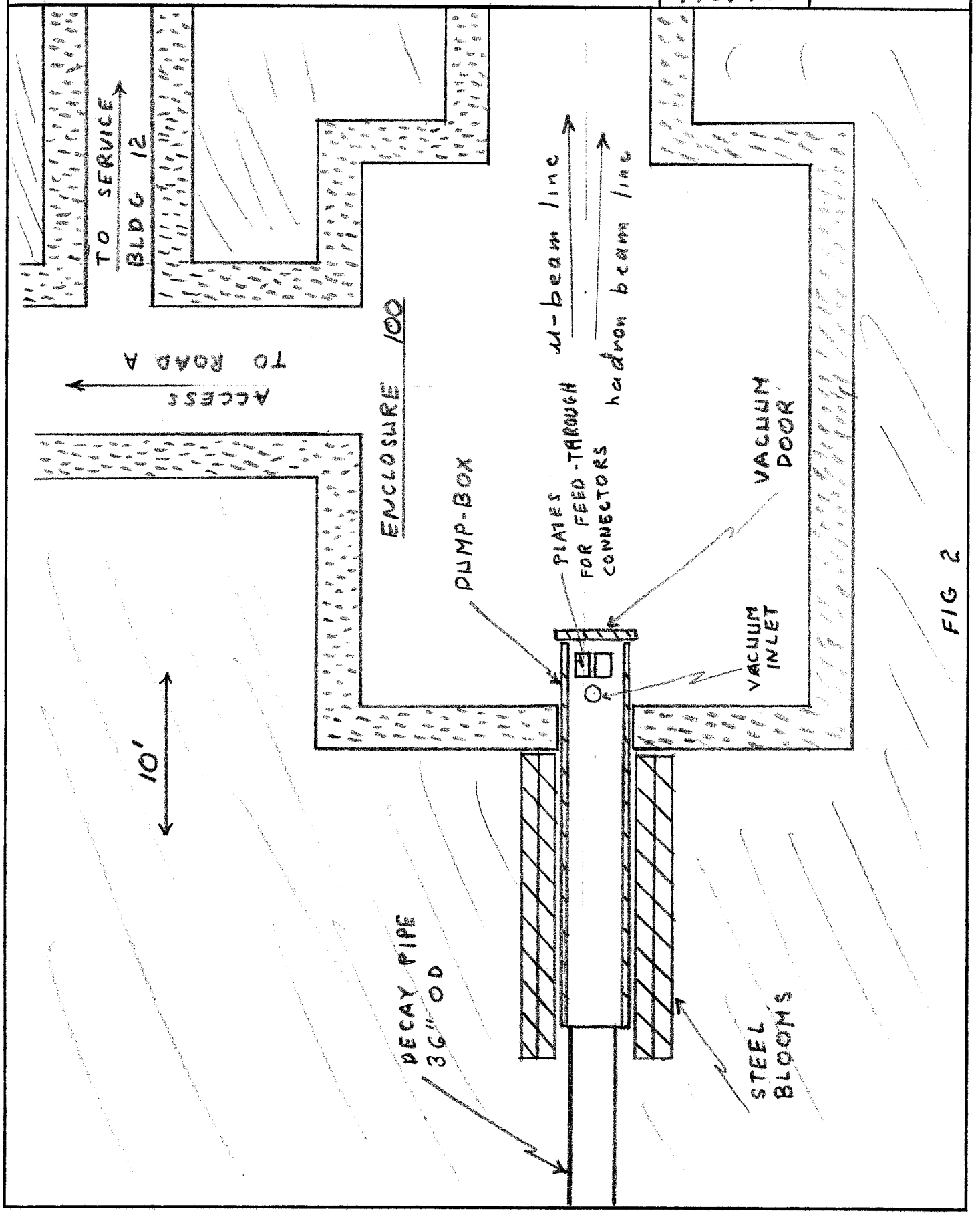

FIG 2

FIG 3 PROFILE

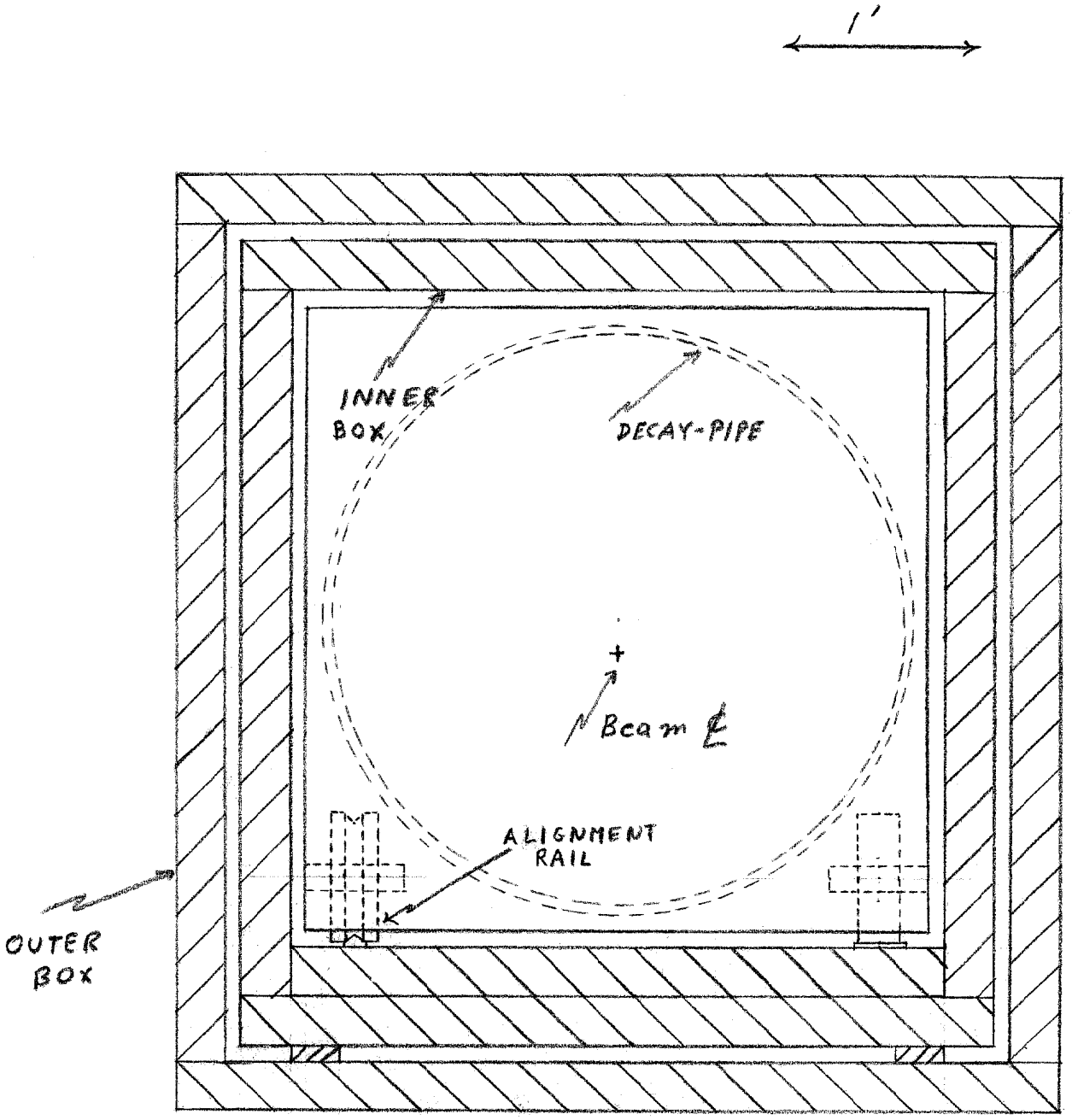

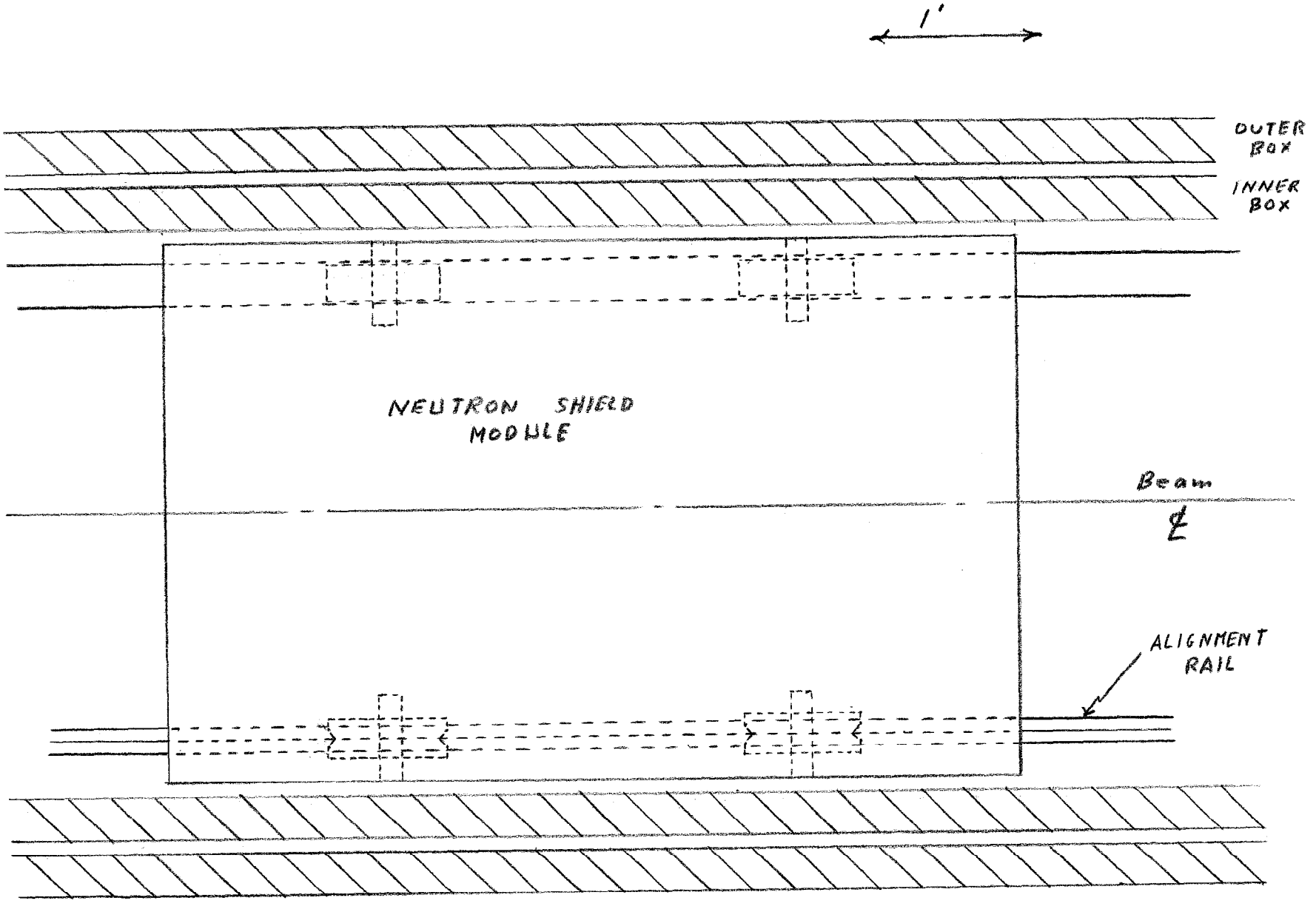

FIG 3 PLAN VIEW

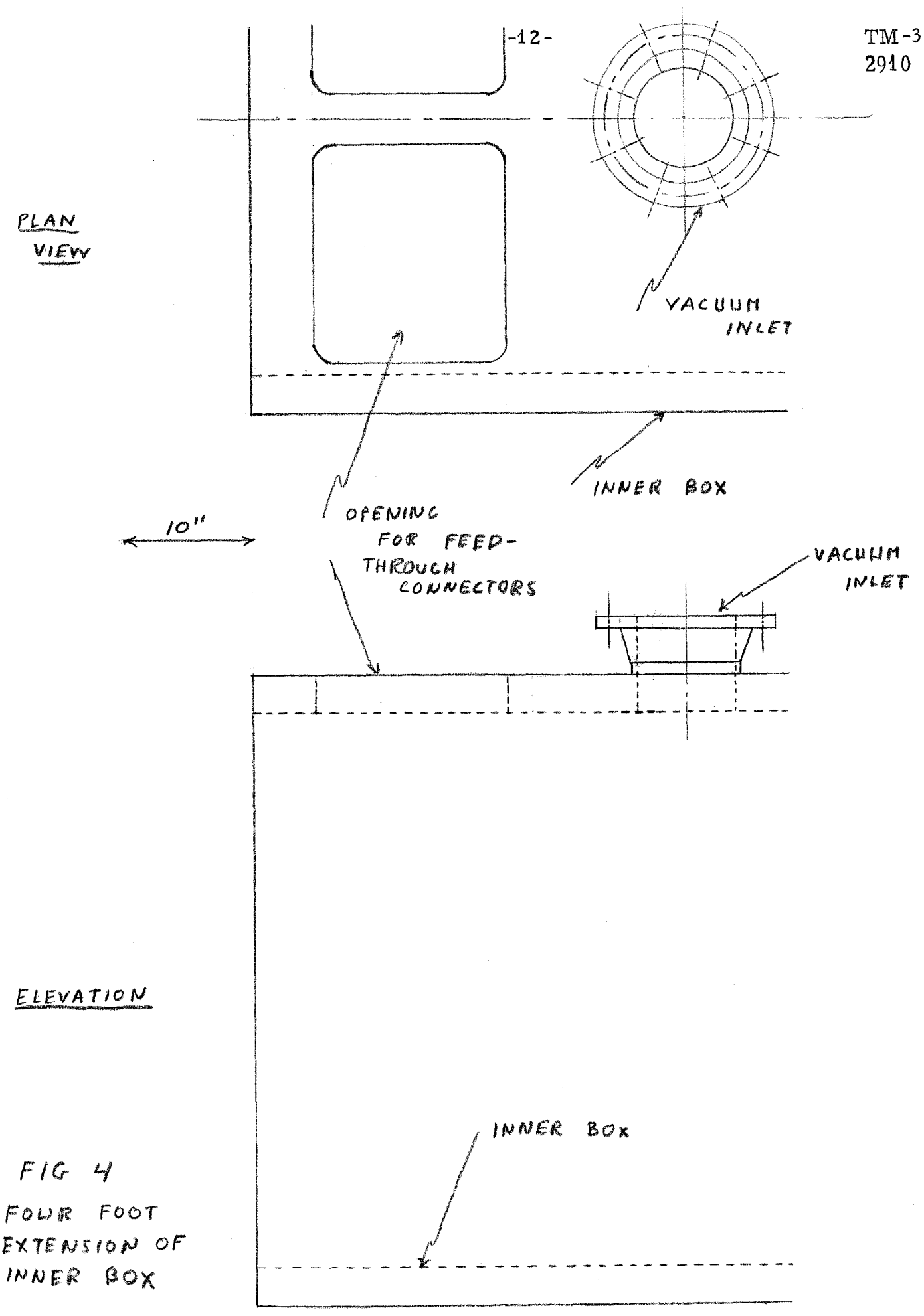

FIG 4
FOUR FOOT EXTENSION OF INNER BOX

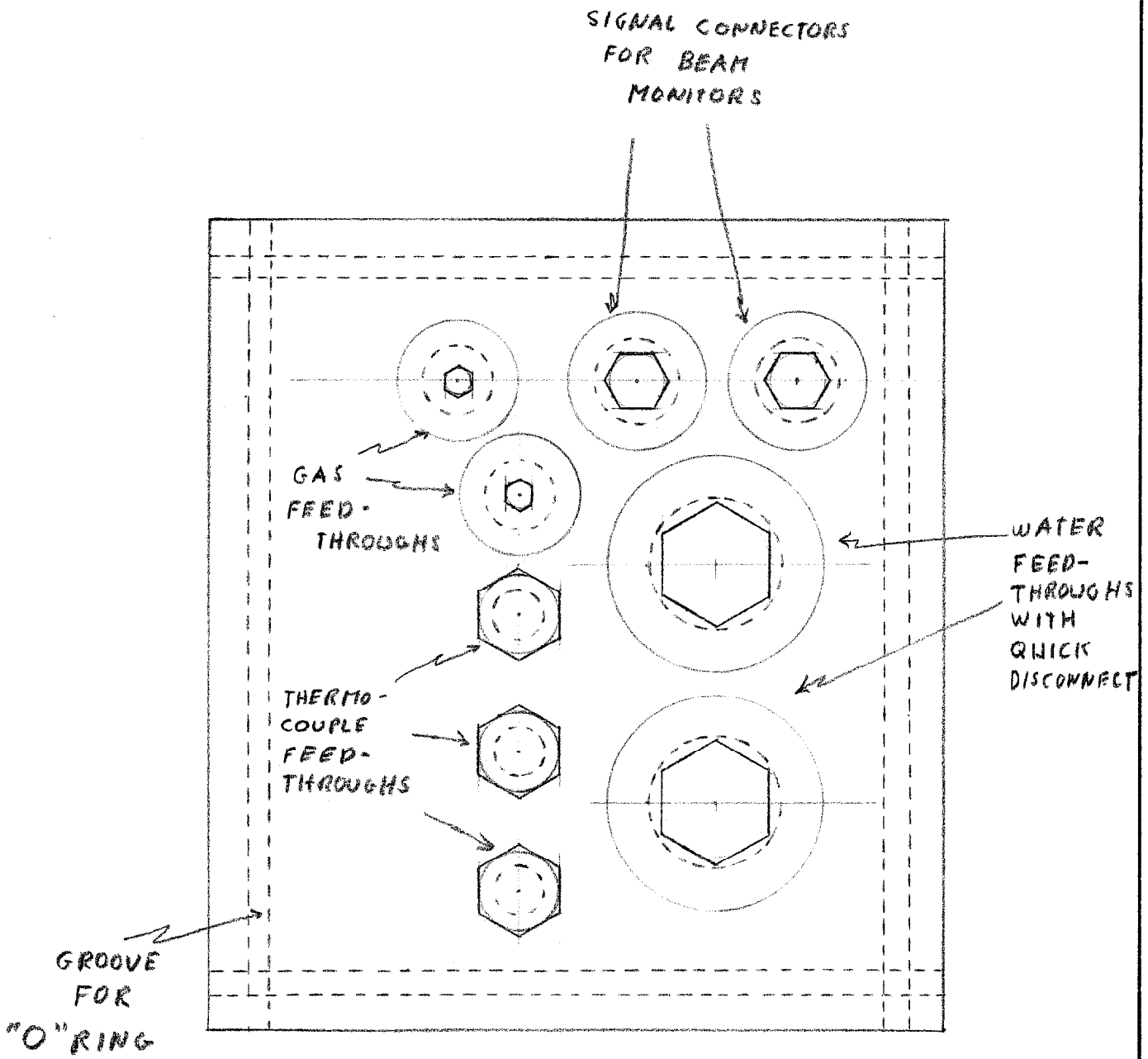

FIG 4 PLATE WITH FEED-THROUGH CONNECTORS

NATIONAL ACCELERATOR LABORATORY ENGINEERING NOTE	SECTION EXP FAC	PROJECT NEUTRINO LAB	SERIAL-CATEGORY TM-305	PAGE 14

SUBJECT: DUMP-BOX (ENTRANCE)

NAME: R STEFANSKI

DATE: 1/18/71

REVISION DATE:

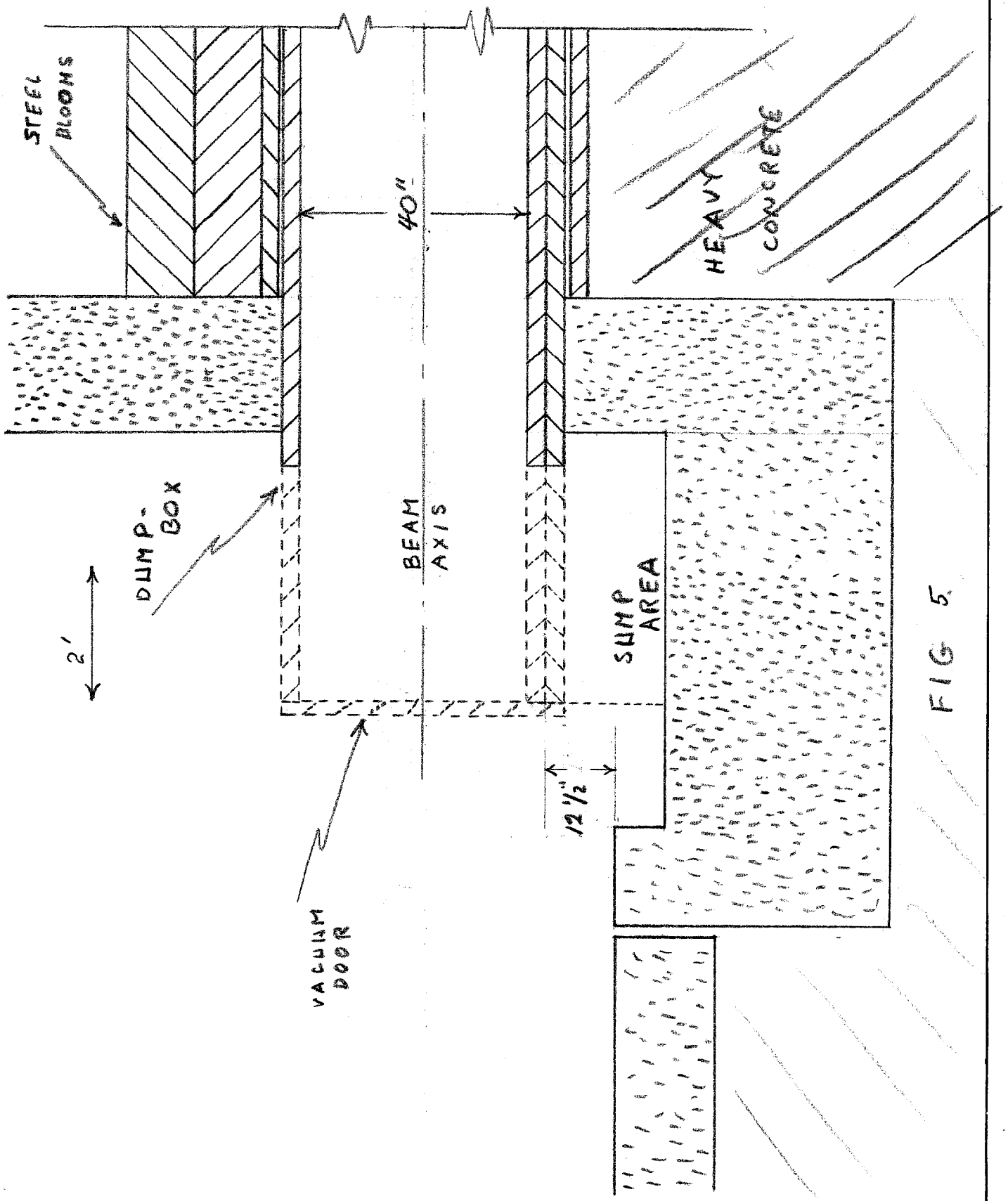

FIG 5

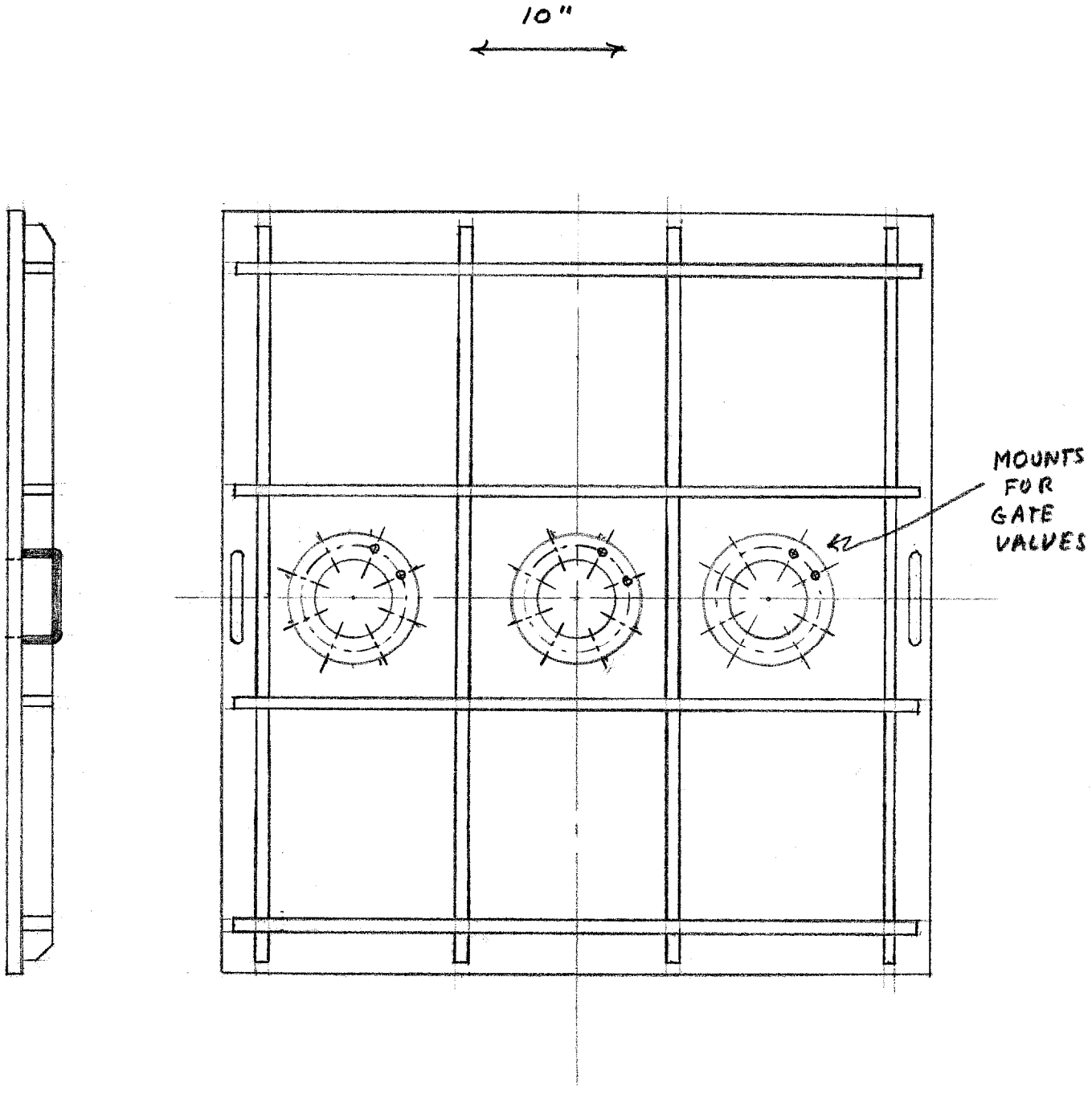

FIG 6 VACUUM DOOR