national accelerator laboratory

TM-325
0423
0437

TRANSFER FUNCTION BETWEEN MAGNETIC FIELD AND EXCITATION CURRENT IN MAIN RING BENDING MAGNETS

S. C. Snowdon

October 27, 1971

SUMMARY

The transfer function between the Fourier amplitudes of the central magnetic field and the excitation current has been calculated using equivalent magnetic circuit analysis. Reluctance effects, eddy currents in the laminations, eddy currents in the vacuum chamber, and eddy currents in the conductors are all included in the calculation. In addition, the impedance looking into the conductor terminals has been calculated. Results are presented for the B1 and B2 main ring bending magnets. Also included is the $\int Bds$ around the ring for the design distribution of B1 and B2 magnets.

Operated by Universities Research Association Inc. Under Contract with the United States Atomic Energy Commission

MAGNETIC CIRCUIT

Figure 1 indicates the magnet cross section under consideration. Let b designate the half width of the pole, h the half-gap height, p the effective pole height, w the yoke width assumed the same in both the top and side yoke, and ℓ the average length of the flux path through the top and side yokes. The effective pole half width is taken to be b+h. Hence the flux density B_o in the top and side yoke is given approximately by

$$\int_o^{b+h} H_y(x,h)\,dx = wB_o. \qquad (1)$$

Recognizing that the flux must be continuous across the boundary y = h, it is reasonable to let B in the pole vary with y according to

$$B(y) = \frac{1}{b}\int_o^b H_y(x,h)\,dx + \left[B_o - \frac{1}{b}\int_o^b H_y(x,h)\,dx\right] \cdot \frac{y-h}{p-h}. \qquad (2)$$

Appendix I indicates that the effect of eddy currents in magnet laminations is to introduce a sheet current in the z-direction lining the coil window of total amount $\int i_I d\ell$ integrated over the mean path length where for

$$i_I = \frac{\lambda\delta}{8\pi\mu} \cdot \frac{\cosh \lambda\frac{\delta}{2} - 1}{\sinh \lambda\frac{\delta}{2}}\, B, \text{ (emu)} \qquad (3)$$

where δ is the lamination thickness, μ the permeability of the iron and

$$\lambda^2 = 4\pi\mu j\omega. \quad \text{(emu)} \tag{4}$$

The conductivity of the iron is σ and ω is the angular frequency with which all magnetic and electrical field quantities are assumed to vary.

Appendix II indicates that eddy currents flowing in the vacuum chamber are represented by current sheets flowing in the z-direction of amount

$$i_c(x,y) = j\omega s U(x,y), \quad \text{(emu)} \tag{5}$$

where $U(x,y)$ is the flux function. The coordinates x and y are given values only at the location of the chamber which will be assumed rectangular of half width a and half height h. Surface conductivity of the vacuum chamber is designated by s.

One may complete the magnetic circuit description using the scalar potential function $V(x,y)$ corresponding to $U(x,y)$ and the notion of a mean flux path in the iron. Thus for $0<x<a$ and (emu)

$$\begin{aligned} V(x,h) + \frac{1}{\mu}\int_h^p B(y)\,dy + \frac{\ell-p+h}{\mu} B_o &= 2\pi NI - 4\pi \int_h^p i_I(y)\,dy \\ &- 4\pi(\ell-p+h)\,i_I - 4\pi \int_x^a i_c(x,h)\,dx - 4\pi \int_o^h i_c(a,y)\,dy. \end{aligned} \tag{6}$$

For $a<x<b + h$ the terms in i_c are dropped. Note that I is the excitation current and N the number of turns in the full gap. Note also that $i_I = i_I(p)$.

Appendix III gives the fields to be used in the region of the vacuum chamber. Outside the chamber the fields are obtained

approximately as follows. First $4\pi i_c(a,h)$ is added to the vertical field at $x = a$, $y = h$. This field is matched to the solutions within the conductors as given in Appendix IV. In summary Appendix III and IV and the continuation condition give

$$H_x(x,y) = \begin{cases} H_o \dfrac{\sum Q_n C_n \sinh Q_n x \sin Q_n y}{\sum Q_n C_n} & 0<x<a \\ \text{Neglected} & a<x<b+h \end{cases} \tag{7}$$

$$H_y(x,y) = \begin{cases} H_o \dfrac{\sum Q_n C_n \cosh Q_n x \cos Q_n y}{\sum Q_n C_n} & 0<x<a \\ A_1 \sinh P(x-a) + B_1 \cosh P(x-a) & a<x<a+c \\ A_2 \sinh P(x-a-c) + B_2 \cosh P(x-a-c) & a+c<x<a+2c \\ \text{etc.,} & \end{cases} \tag{8}$$

where

$$P^2 = 4\pi\sigma_c j\omega, \qquad \text{(emu)} \tag{9}$$

$$Q_n \tan Q_n h = 4\pi j\omega s, \qquad \text{(emu)} \tag{10}$$

$$A_n \sinh Pc = -\frac{4\pi I}{h}\,[n-(n-1)\cosh Pc] - B_1(\cosh Pc-1), \tag{11}$$

$$B_n = -\frac{4\pi I}{h}(n-1) + B_1, \tag{12}$$

$$B_1 = H_y(a,h) + 4\pi j\omega s U(a,h) \tag{13}$$

$$C_n\left(Q_n \cosh Q_n a + 4\pi j\omega s \sinh Q_n a\right)\cdot\left(1 + \frac{\sin 2Q_n h}{2Q_n h}\right) = \frac{1}{h}\cdot\frac{\sin Q_n h}{Q_n h}. \tag{14}$$

Appendix III gives B_1 in terms of H_o, Q_n, and C_n.

In Eqs. (7-14) σ_c is the conductivity of the copper conductors, c is the horizontal width of the conductor, and H_o is the central magnetic field.

The magnetic circuit equations may now be evaluated. For x = a, Eq. (6) gives

$$V(a,h) + 4\pi j\omega s \int_o^h U(a,y)dy + \frac{k+1}{\mu}\left[\ell-\frac{1}{2}(p-h)\left(1-\frac{w}{b}\right)\right]B_o$$
$$- \frac{k+1}{\mu}(p-h)\left[\left(B_{n_1+1}+\ldots B_{n_2}\right)\frac{\sinh Pc}{Pb} + \left(A_{n_1+1}+\ldots A_{n_2}\right)\cdot\frac{\cosh Pc-1}{Pb}\right] = 2\pi NI, \tag{15}$$

where the expression in V and U is evaluated in Appendix III and n_1 and n_2 are the integer parts of (b-a)/c and (b-a+h)/c. For convenience

$$k = \frac{\lambda\delta}{2}\cdot\frac{\cosh\lambda\frac{\delta}{2}-1}{\sinh\lambda\frac{\delta}{2}}. \tag{16}$$

The other circuit equation, Eq. (1), becomes

$$U(a,h) + \left(B_1+\ldots B_{n_2}\right)\frac{\sinh Pc}{P} + \left(A_1+\ldots A_{n_2}\right)\cdot\frac{\cosh Pc-1}{P} = wB_o. \tag{17}$$

After using Eqs. (11-13) and rearranging, Eqs. (15) and (17) become

$$V(a,h) + 4\pi j\omega s\int_o^h U(a,y)dy$$
$$- \frac{(k+1)(p-h)\left(n_2-n_1\right)(\cosh Pc-1)}{\mu Pb\sinh Pc}\cdot\left[H_y(a,h) + 4\pi j\omega s U(a,h)\right]$$
$$+ \frac{k+1}{\mu}\left[\ell-\frac{1}{2}(p-h)\left(1-\frac{w}{h}\right)\right]B_o = 2\pi I\left[N-\frac{(k+1)(p-h)\left(n_2^2-n_1^2\right)(\cosh Pc-1)}{\mu hPb\sinh Pc}\right], \tag{18}$$

and

$$U(a,h) + 2n_2 \frac{(\cosh Pc-1)}{P \sinh Pc} \left[H_y(a,h) + 4\pi j\omega s U(a,h)\right]$$

$$- wB_o = 4\pi I n_2^2 \frac{(\cosh Pc-1)}{Ph \sinh Pc} . \tag{19}$$

Appendix III relates the expressions in U, V, and H_y to H_o. Thus Eqs. (18) and (19) provide two linear equations which may be solved simultaneously for H_o and B_o in terms of I. Thus

$$H_o = TI, \tag{20}$$

where T, the transfer function, is obtained by eliminating B_o from Eqs. (18) and (19). In addition, the sextupole term introduced by the vacuum chamber may be found by differentiating Eq. (8) twice. Thus, using Eq. (20)

$$H_o'' = T \frac{\sum Q_n^3 C_n}{\sum Q_n C_n} I. \tag{21}$$

AC IMPEDANCE OF COIL

The inductance of the windings may be found by solving Eqs. (18) and (19) for B_o and using it to construct the flux linkage per unit current. Thus

$$L = \frac{2NwB_o}{I} \text{ (Magnet Length). (emu)} \tag{22}$$

The ac resistance of the conductors is found by finding the power loss of series connected conductors in a deep slot. For the main-ring magnets it seems reasonable to calculate this loss

assuming that the conductors are paired by twos in the layers of a deep slot. This calculation follows the reasoning of Appendix IV. See FN-111 for more detail. The conductor height is taken to be the average height of the inner and outer conductor heights. If the result of this calculation yields the resistance R, then the ac impedance of the magnet is

$$Z = R + j\omega L. \tag{25}$$

The inductance, of course, will have an imaginary part and contribute to the actual resistance seen between the coil terminals.

NUMERICAL RESULTS

The relations necessary to solve Eqs. (18) and (19) have been coded for the CDC 6600 in a program HITRANS which yields basically H_o/I and B_o/I for various frequencies and assumed permeabilities. The results are almost independent of the permeability which attests to the fact that the effects of eddy currents in the conductors and the vacuum chamber dominate over the eddy current effects in the magnet laminations. A reasonable choice of permeability might be the value giving the observed AMPFAC. If T(0) designates the transfer function for dc, then

$$\text{AMPFAC} = \frac{2\pi N}{hT(0)} \ . \tag{26}$$

A second transfer function is produced from the T of Eq. (22) by noting that every magnet coil is paralleled by a 10-ohm resistor. Thus the effective transfer function TE is

$$TE = \frac{10}{10+Z} \cdot T \tag{27}$$

Finally one should account for the capacitance of the coil to the yoke. The current passing into the capacitance is determined by the voltage to ground developed when the magnets are all connected in series and to the appropriate power supplies. A rough estimate of this effect using 12 power supplies and all identical magnets assuming .065 μF for each magnet shows that this effect on the transfer function may be neglected below 10,000 Hz.

The attached computer output gives the transfer functions and ac impedances for the B1 and B2 magnets. The net bending for 378 B1 plus 396 B2 magnets is also given. A permeability of 3000 has been chosen since this gives approximately the observed AMPFAC. These numerical results are depicted graphically in Figs. (4-8).

ADDITIONAL CONSIDERATIONS

No account has been taken of hysteresis effects in the iron. This is considered justifiable if one has apriori knowledge that a frequency synthesis produces a monotonically varying function of time. If, however, one is interested in the response to a ripple frequency that might be present in the power supply, one should take into account the resistance added to the ac impedance by this power loss. The effect probably is small since the resistance contribution from the vacuum chamber is larger than that of the eddy currents in the laminations.

Finally, one should recognize that the approximations inherent in the use of an equivalent magnetic circuit and in a deep slot ac resistance calculation lead to uncertainties in all the above estimates. Perhaps the results are accurate to about 30 percent.

ACKNOWLEDGEMENTS

Information regarding appropriate physical constants such as conductivity of the laminations and the vacuum chamber was provided by R. Yamada. The coil-to-core capacitance was obtained from an October 15, 1971 memo to P. J. Reardon from Q. A. Kerns. Finally, thanks are due J. E. Griffin who provided the preliminary results of his measurements of the transfer function on the B1 magnet. The calculations on the B1 magnets are in substantial agreement with his data.

APPENDIX I

EDDY CURRENTS IN MAGNET LAMINATION

Figure 2 gives more detail of the infinite lamination on which the eddy current calculation will be based. If x designates the coordinate orthogonal to y and z as shown in Figure 2, then only B_x is needed and is governed by

$$\frac{\partial^2 B_x}{\partial z^2} - 4\pi\mu\sigma j\omega B_x = 0. \quad \text{(emu)} \tag{1}$$

Letting

$$\lambda^2 \equiv 4\pi\mu\sigma j\omega, \tag{2}$$

one has

$$B_x = \mu H \frac{\cosh \lambda z}{\cosh \lambda\frac{\delta}{2}}, \tag{3}$$

where μ is the permeability of the iron, σ the conductivity of the iron, and δ the lamination thickness.

The only value of B_x that can be used in the equivalent magnetic circuit analysis is the average value. From Eq. (3) one has for the average flux density

$$B = \frac{2\mu H}{\lambda\delta} \tanh \lambda\frac{\delta}{2}. \tag{4}$$

Figure 3 indicates the manner in which the infinite slab calculations are to be utilized for laminations of finite extent. In particular, the net current flowing along the edge of the lamination is assumed to be that current flowing vertically in one half of the infinite lamination. Thus the current per unit length is

$$4\pi i_I = H-H(0) = H\left(1 - \frac{1}{\cosh \lambda\frac{\delta}{2}}\right) . \quad \text{(emu)} \qquad (5)$$

Eliminating H between Eqs. (4) and (5) one arrives at

$$I_I = \frac{\lambda\delta}{8\pi\mu} \cdot \frac{\cosh \lambda\frac{\delta}{2}-1}{\sin \lambda\frac{\delta}{2}} B. \quad \text{(emu)} \qquad (6)$$

APPENDIX II
CURRENT FLOW IN THIN SHEETS

Figures 1c and 1d indicate the spatial relationships for the present calculation. The only assumption made is that the conducting sheet is sufficiently thin that the induced electric field does not vary throughout its thickness. For the vacuum chamber wall thickness of interest this means that the frequencies must be less than 100 kHz.

A gauge for which $\nabla \cdot \overline{A} = 0$ is used for the vector potential. Then $A_z(x,y)$ is adequate for the description of the fields. Thus

$$E_z = -j\omega A_z. \qquad \text{(emu)} \qquad (1)$$

Hence, the current density

$$J_z = \sigma E_z = -j\omega\sigma A_z, \qquad \text{(emu)}$$

where σ is the conductivity of the sheet. Hence, if i_c designates the current flowing in the sheet per cm and d is the thickness one has

$$i_c = J_z d = -j\omega\sigma d A_z. \qquad \text{(emu)} \qquad (3)$$

Letting $s = \sigma d$ the surface conductivity and

$$U(x,y) = -A_z(x,y) \qquad \text{(emu)} \qquad (4)$$

the flux function, one has

$$i_c(x,y) = j\omega s U(x,y). \qquad \text{(emu)} \qquad (5)$$

APPENDIX III

EDDY CURRENT FIELDS FROM RECTANGULAR CHAMBER IN IDEAL DIPOLE MAGNET

An idealized calculation is made of the gap field in Fig. 1. The conductors are replaced by a sheet current I placed against the side wall of a window frame magnet of aperture 2a and gap 2h. Permeability of iron is assumed infinite. In order to utilize this calculation in the main text, the current I is expressed in terms of the central field H_o.

By superposition of elementary solutions of Laplace's equation one may choose

$$V(x,y) = 4\pi I \sum C_n \cosh Q_n x \sin Q_n y \tag{1}$$

for the scalar potential function and

$$U(x,y) = 4\pi I \sum C_n \sinh Q_n s \cos Q_n y \tag{2}$$

for the flux function. From Eq. (1) or Eq. (2) one has

$$H_x(x,y) = 4\pi I \sum Q_n C_n \sinh Q_n s \sin Q_n y \tag{3}$$

and

$$H_y(x,y) = 4\pi I \sum Q_n C_n \cosh Q_n x \cos Q_n y. \tag{4}$$

At y = h the boundary condition is

$$H_x(x,h) = 4\pi i_c(x,h), \tag{5}$$

which from Appendix II gives

$$\sum C_n \left(Q_n \sin Q_n h - 4\pi j\omega s \cos Q_n h\right) \sinh Q_n x = 0. \tag{6}$$

Eq. (6) may be satisfied if Q_n is the solution

$$Q_n \tan Q_n h = 4\pi j\omega s. \tag{7}$$

At x = a the boundary condition is

$$H_y(a,y) = \frac{2\pi I}{h} - 4\pi i_c(a,y), \tag{8}$$

which from Appendix I gives

$$\sum C_n\left(q_n \cosh Q_n a + 4\pi j\omega s \sinh Q_n a\right) \cos Q_n y = \frac{1}{2h} . \tag{9}$$

The functions $\cos Q_n y$ form an orthogonal set since the Q_n satisfy Eq. (7). Therefore,

$$C_n\left(Q_n \cosh Q_n a + 4\pi j\omega s \sinh Q_n a\right)\left(1 + \frac{\sin 2Q_n h}{2Q_n h}\right) = \frac{1}{h} \cdot \frac{\sin Q_n h}{Q_n h} . \tag{10}$$

This expression for C_n formally completes the solution. One desires, however, to eliminate the current I by expressing it in terms of the central field. Thus, from Eq. (4)

$$H_o = 4\pi I \sum Q_n C_n. \tag{11}$$

In the main text it is shown that the following expressions are needed.

$$V(a,h) + 4\pi j\omega s \int_o^h U(a,y)\,dy = H_o \frac{\sum \dfrac{\left(\dfrac{\sin Q_n h}{Q_n h}\right)^2}{\left(1+\dfrac{\sin 2Q_n h}{2Q_n h}\right)}}{\sum Q_n C_n} , \tag{12}$$

and

$$H_y(a,h) + 4\pi j\omega s U(a,h) = H_o \frac{\sum \dfrac{1}{\left(1+\dfrac{2Q_n h}{\sin 2Q_n h}\right)}}{\sum hQ_n C_n} , \tag{13}$$

and

$$U(a,h) = H_o \frac{\sum C_n \sinh Q_n a \cos Q_n h}{\sum Q_n C_n} . \qquad (14)$$

Thus given Q_n as the solution of Eq. (7) and C_n from Eq. (10) the desired expressions are seen to be expressed in terms of H_o the central field.

APPENDIX IV

FIELD IN DIPOLE MAGNET WITHIN CONDUCTORS IN GAP

An ideal situation is envisaged in which the magnet poles have infinite permeability, zero conductivity, and extend to infinity. Although easily modified for other cases, it is further assumed that only one layer of conductors exists between the median plane and the pole.

If the conductors are counted with the index n, n = 1 being the conductor beginning at the edge of the vacuum chamber (removed), then

$$H_{yn} = A_n \sinh Px + B_n \cosh Px, \tag{1}$$

where x = 0 at the left hand edge of each conductor of the right hand coil. Reasoning similar to that of Appendix I gives

$$P^2 = 4\pi j\omega\sigma, \tag{2}$$

where σ is the conductivity of the copper. Further, let c be the horizontal width of each conductor.

Continuity of H_y between conductors gives

$$H_{y,n+1}(0) = H_{y,n}(c) \tag{3}$$

or

$$B_{n+1} = A_n \sinh Pc + B_n \cosh Pc. \tag{4}$$

The ampere integral around the nth conductor gives

$$H_{yn}(0) - H_{yn}(c) = \frac{4\pi I}{h}, \qquad \text{(emu)} \tag{5}$$

or

$$B_n - A_n \sinh Pc - B_n \cosh Pc = \frac{4\pi I}{h}. \qquad \text{(emu)} \tag{6}$$

Equations (4) and (6) may be solved in terms of B_1 which in turn is the magnetic field in the aperture at the beginning of the conductors. Thus

$$A_n \sinh Pc = -\frac{4\pi I}{h}[n-(n-1) \cosh Pc] - (\cosh Pc-1) B_1 \qquad (7)$$

and

$$B_n = -\frac{4\pi I}{h} (n-1) + B_1. \qquad (8)$$

Of course, B_1 would, in turn be related to I by a simple ampere integral around all the conductors. The intention, however, is to utilize the magnetic fields within the conductor as one component in a magnetic circuit. Hence B_1 and I are intentionally separated.

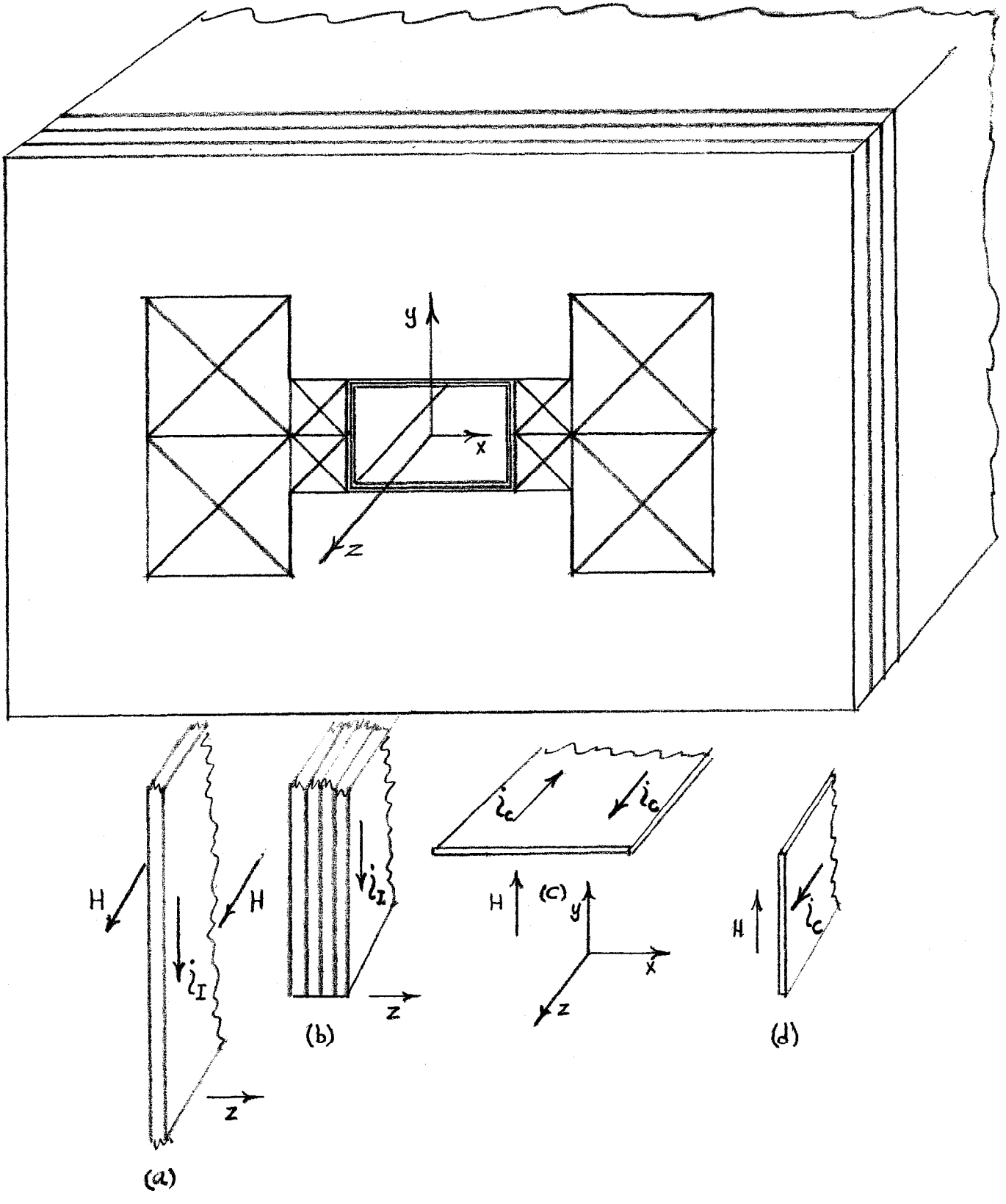

Fig. 1 MAGNET CROSS SECTION AND DETAILS

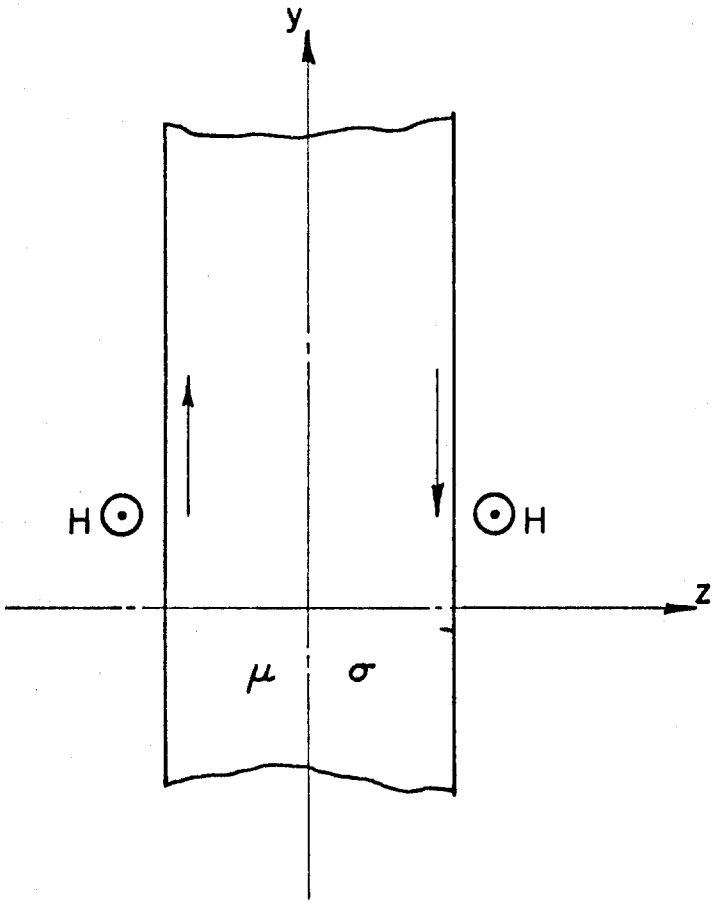

FIG. 2 INFINITE SLAB LAMINATION - EDGE VIEW. MAGNETIC FIELD IS DIRECTED UP OUT OF PAPER

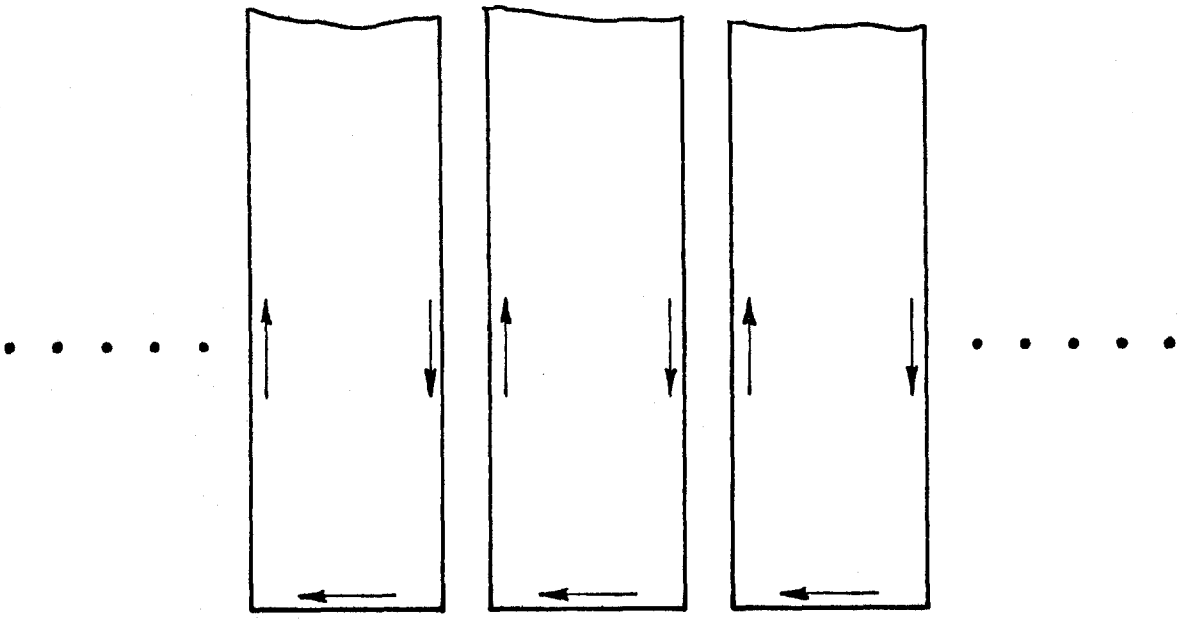

FIG. 3 SEMI INFINITE SLAB LAMINATION
EDGE VIEW

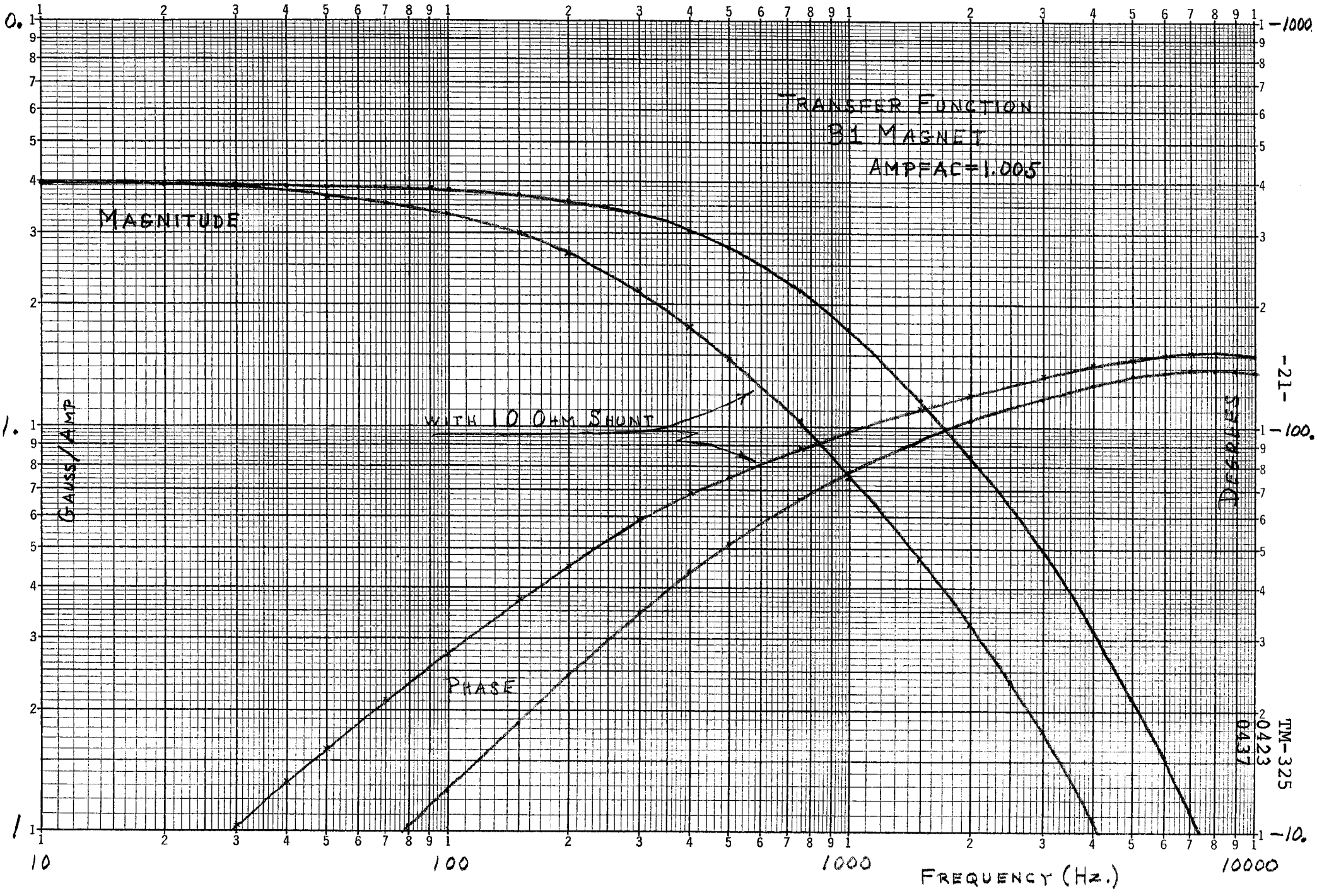

TM-325
0423
0437

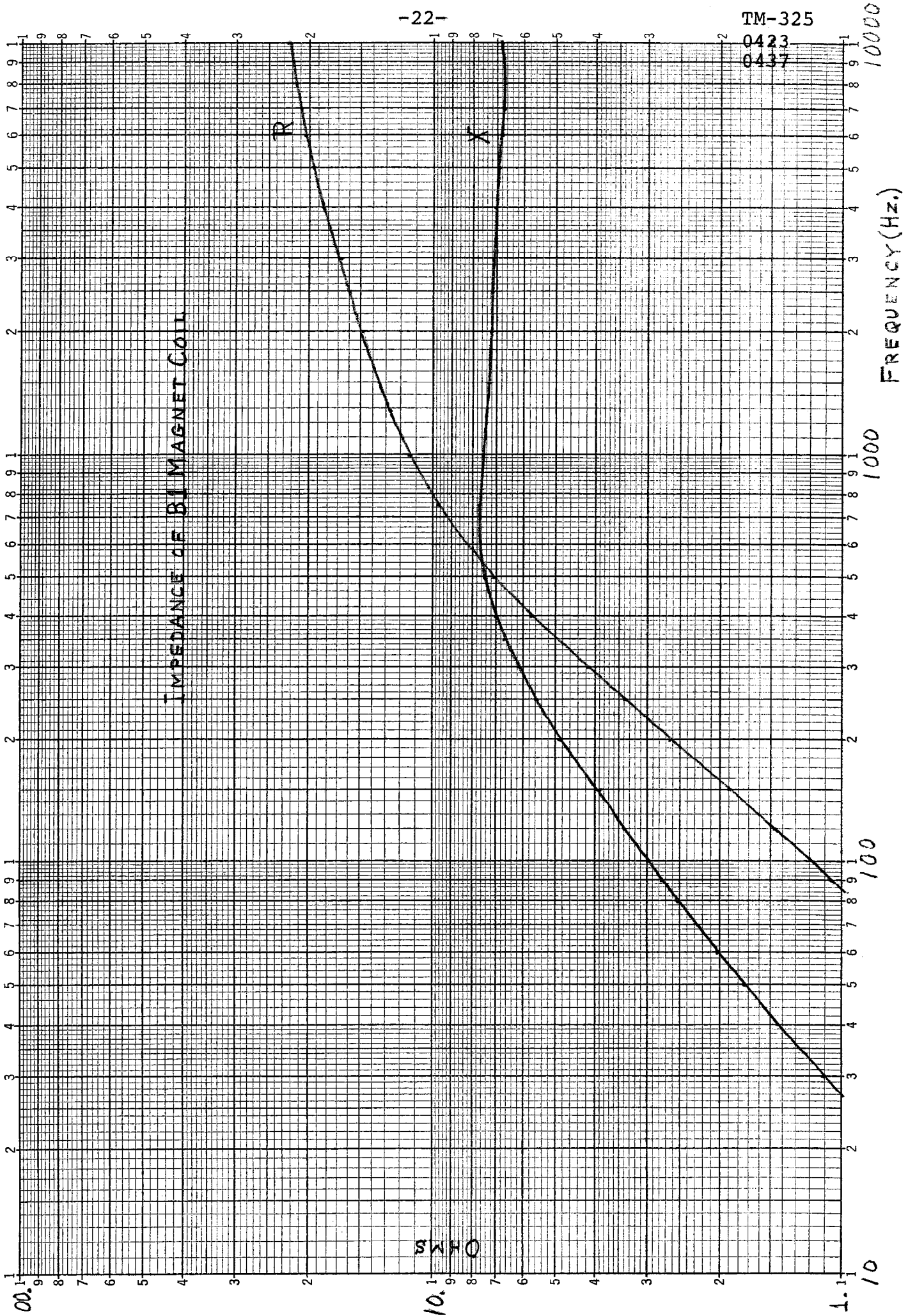
IMPEDANCE OF B1 MAGNET COIL
R
X
OHMS
FREQUENCY (Hz.)
10000
1000
100
10
100.
10.
1.

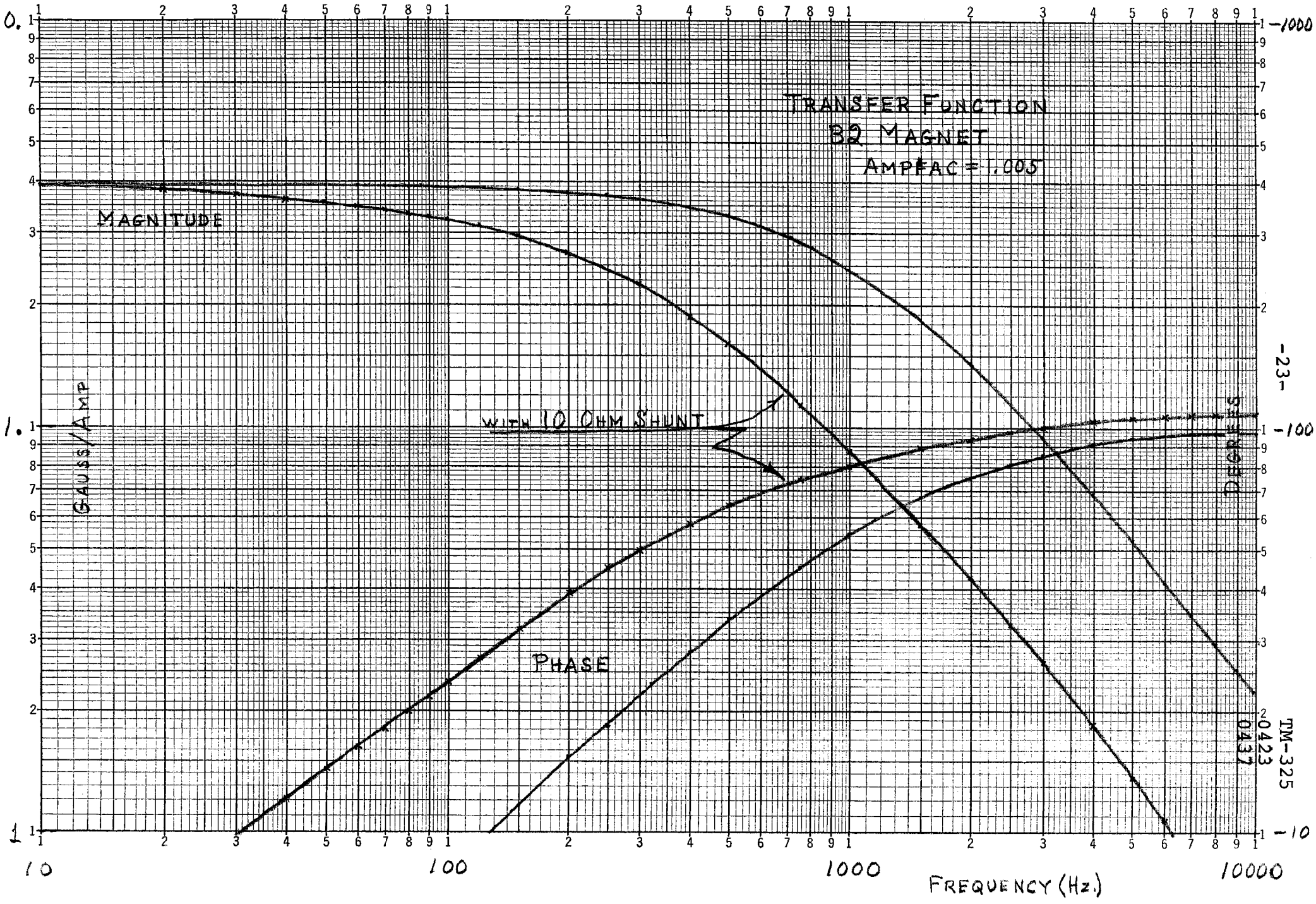

TM-325
0423
0437

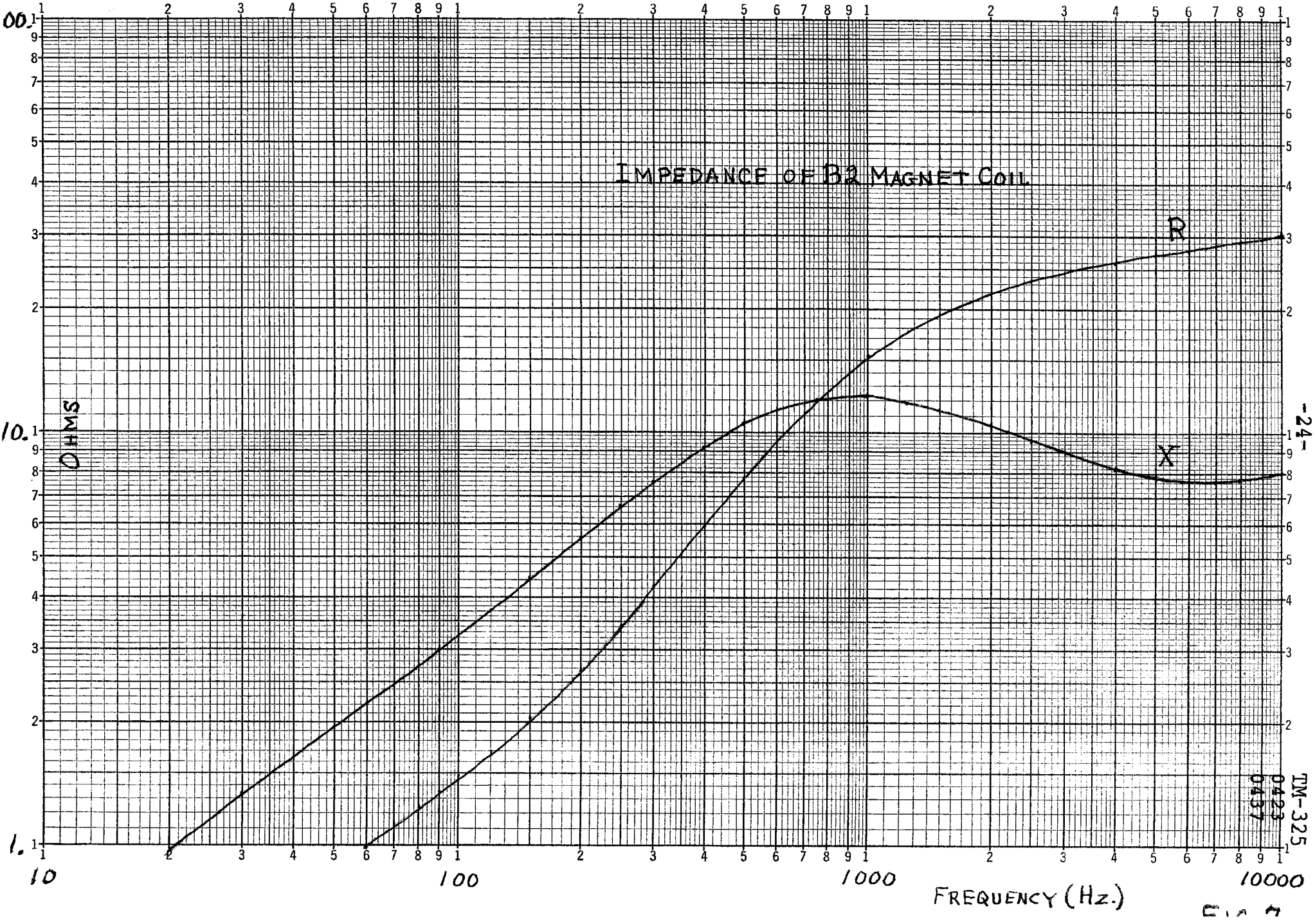
IMPEDANCE OF B2 MAGNET COIL
R
X
OHMS
100.
10.
1.
10
100
1000
10000
FREQUENCY (Hz.)

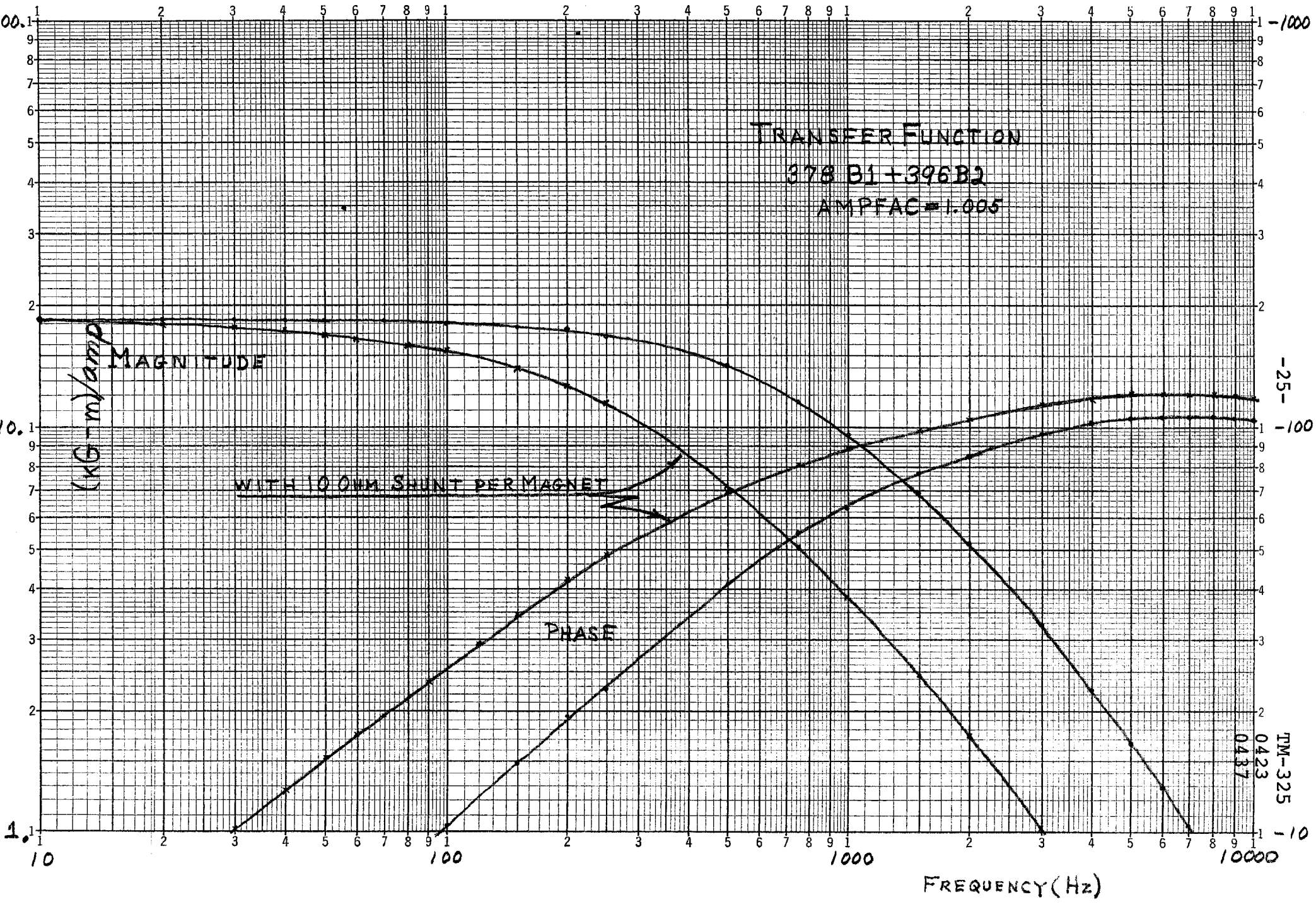

TM-325
0423
0437

TRANSFER FUNCTION BETWEEN FIELD AND CURRENT IN MAIN RING BENDING MAGNET(B1)

GAP(IN)	= 1.570	APER(IN)	= 5.000	POLE WIDTH(IN)	= 8.500	YOKE WIDTH(IN)	=25.250
YOKE HEIGHT(IN)	=14.250	YOKE THICKNESS(IN)	= 5.000	LAMINATION THICKNESS(IN)	= .0615	VAC. CHAMB. THICK.(IN)	= .050
IRON REST.(MUOHM-CM)	=12.000	VAC. CH. REST.(MUOHM-CM)	=75.500	PERMEABILITY OF IRON	=3000.0	AMPFAC	=1.0056
DC INDUCTANCE(HY)	= .0941	COIL RESIST.(MUOHM-IN)	= .772	COIL CORNER RADIUS(IN)	= .0625	MAGNET LENGTH(IN)	=239.00
NO. TURNS IN INNER COIL	= 4	INNER COIL WIDTH(IN)	= 1.113	INNER COIL HEIGHT(IN)	= .670	INNER COIL HOLEDIAM.(IN)	= .340
NO. TURNS IN OUTER COIL	= 8	OUTER COIL WIDTH(IN)	= 1.096	OUTER COIL HEIGHT(IN)	= .922	OUTER COIL HOLEDIAM.(IN)	= .340

	MAGNET ALONE				MAGNET WITH 10 OHMS			
FREQ	TRANSFER FCT.		AC IMPEDANCE		TRANSFER FCT.		AC IMPEDANCE	
(HZ)	(GAUSS/AMP)	(DEGREES)	(OHMS)		(GAUSS/AMP)	(DEGREES)	(OHMS)	
0.0000	3.9359	0.0000	.0059	0.0000	3.9336	0.0000	.0059	0.0000
5.0000	3.9353	-.7195	.0122	.1928	3.9297	-1.8224	.0159	.0922
10.0000	3.9333	-1.4399	.0309	.3839	3.9183	-3.6276	.0454	.3810
15.0000	3.9302	-6.1482	.0612	.5720	3.9000	-5. 001	.0928	.5632
20.0000	3.9259	-2.8484	.1018	.7558	3.8756	-7.1270	.1556	.7365
25.0000	3.9208	-3.5407	.1512	.9342	3.8462	-8.7990	.2316	.8990
30.0000	3.9149	-4.2224	.2078	1.1068	3.8129	-10.4105	.3174	1.0498
35.0000	3.9085	-4.8931	.2701	1.2730	3.7768	-11.9591	.4103	1.1887
40.0000	3.9016	-5.5533	.3366	1.4329	3.7388	-13.4455	.5081	1.3158
45.0000	3.8944	-6.2036	.4061	1.5865	3.6997	-14.8723	.6086	1.4318
50.0000	3.8871	-6.8461	.4776	1.7342	3.6601	-16.2434	.7103	1.5376
55.0000	3.8795	-7.4789	.5502	1.8763	3.6204	-17.5635	.8121	1.6345
60.0000	3.8719	-8.1059	.6234	2.0133	3.5810	-18.8376	.9132	1.7221
65.0000	3.8642	-8.7271	.6965	2.1457	3.5420	-20.0704	1.0129	1.8028
70.0000	3.8564	-9.3435	.7697	2.2739	3.5036	-21.2665	1.1110	1.8768
75.0000	3.8485	-9.9559	.8423	2.3983	3.4658	-22.4297	1.2072	1.9450
80.0000	3.8406	-10.5649	.9145	2.5194	3.4287	-23.5638	1.3014	2.0079
85.0000	3.8325	-11.1709	.9862	2.6374	3.3922	-24.6715	1.3938	2.0662
90.0000	3.8244	-11.7742	1.0574	2.7528	3.3563	-25.7556	1.4842	2.1201
95.0000	3.8161	-12.3753	1.1281	2.8657	3.3210	-26.8180	1.5728	2.1703
100.0000	3.8077	-12.9743	1.1985	2.9764	3.2862	-27.8605	1.6596	2.2169
105.0000	3.7991	-13.5714	1.2686	3.0851	3.2519	-28.8845	1.7447	2.2602
110.0000	3.7904	-14.1666	1.3385	3.1919	3.2180	-29.8912	1.8283	2.3005
115.0000	3.7814	-14.7599	1.4083	3.2969	3.1845	-30.8813	1.9103	2.3380
120.0000	3.7723	-15.3514	1.4780	3.4003	3.1514	-31.8557	1.9908	2.3728
125.0000	3.7630	-15.9410	1.5478	3.5021	3.1186	-32.8150	2.0700	2.4051
130.0000	3.7535	-16.5289	1.6177	3.6024	3.0861	-33.7595	2.1477	2.4350
135.0000	3.7438	-17.1145	1.6877	3.7013	3.0539	-34.6897	2.2241	2.4626
140.0000	3.7339	-17.6982	1.7580	3.7987	3.0220	-35.6058	2.2993	2.4880
145.0000	3.7238	-18.2798	1.8286	3.8947	2.9904	-36.5082	2.3731	2.5114
150.0000	3.7135	-18.8592	1.8995	3.9893	2.9591	-37.3969	2.4457	2.5327
155.0000	3.7030	-19.4363	1.9708	4.0826	2.9280	-38.2722	2.5171	2.5522
160.0000	3.6923	-20.0111	2.0424	4.1745	2.8971	-39.1343	2.5872	2.5698
165.0000	3.6817	-20.5834	2.1144	4.2650	2.8665	-39.9833	2.6561	2.5856
170.0000	3.6701	-21.1533	2.1869	4.3542	2.8362	-40.8192	2.7238	2.5996
175.0000	3.6588	-21.7206	2.2598	4.4420	2.8062	-41.6424	2.7902	2.6124
180.0000	3.6477	-22.2852	2.3331	4.5284	2.7763	-42.4527	2.8555	2.6234
185.0000	3.6365	-22.8471	2.4068	4.6135	2.7466	-43.2505	2.9195	2.6335
190.0000	3.6237	-23.4063	2.4810	4.6971	2.7175	-44.0359	2.9824	2.6412
195.0000	3.6116	-23.9626	2.5556	4.7794	2.6886	-44.8089	3.0440	2.6480
200.0000	3.5997	-24.5159	2.6306	4.8603	2.6598	-45.5697	3.1045	2.6536

TRANSFER FUNCTION BETWEEN FIELD AND CURRENT IN MAIN RING BENDING MAGNET (B2)

GAP(IN)	= 2.000	APER(IN)	= 4.000	POLE WIDTH(IN)	= 7.500	YOKE WIDTH(IN)	=25.250
YOKE HEIGHT(IN)	=14.250	YOKE THICKNESS(IN)	= 4.750	LAMINATION THICKNESS(IN)	= .0615	VAC. CHAMB. THICK.(IN)	= .050
IRON RESI.(MUOHM-CM)	=12.000	VAC. CH. RESI.(MUOHM-CM)	=75.500	PERMEABILITY OF IRON	=3000.0	AMPFAC	=1.0045
DC INDUCTANCE(HY)	= .0082	COIL RESIST.(MUOHM-IN)	= .772	COIL CORNER RADIUS(IN)	= .0625	MAGNET LENGTH(IN)	=239.00
NO. TURNS IN INNER COIL	= 4	INNER COIL WIDTH(IN)	= 1.096	INNER COIL HEIGHT(IN)	= .922	INNER COIL HOLEDIAM.(IN)	= .340
NO. TURNS IN OUTER COIL	= 12	OUTER COIL WIDTH(IN)	= 1.096	OUTER COIL HEIGHT(IN)	= .922	OUTER COIL HOLEDIAM.(IN)	= .445

	MAGNET ALONE				MAGNET WITH 10 OHMS			
FREQ	TRANSFER FCT.		AC IMPEDANCE		TRANSFER FCT.		AC IMPEDANCE	
(HZ)	(GAUSS/AMP)	(DEGREES)	(OHMS)		(GAUSS/AMP)	(DEGREES)	(OHMS)	
0.0000	3.9402	0.0000	.0073	0.0000	3.9373	0.0000	.0073	0.0000
5.0000	3.9397	-.4349	.0246	.2572	3.9287	-1.9040	.0311	.2558
10.0000	3.9382	-.8641	.0740	.5064	3.9044	-3.7416	.0985	.4977
15.0000	3.9359	-1.2972	.1493	.7410	3.8677	-5.4632	.1934	.7156
20.0000	3.9331	-1.7015	.2423	.9579	3.8234	-7.0446	.3212	.9052
25.0000	3.9299	-2.1055	.3447	1.1564	3.7754	-8. 852	.4525	1.0673
30.0000	3.9263	-2.5031	.4499	1.3380	3.7269	-9.7998	.5849	1.2055
35.0000	3.9227	-2.8922	.5533	1.5053	3.6798	-11.0104	.7133	1.3247
40.0000	3.9191	-3.2751	.6521	1.6612	3.6353	-12.1395	.8351	1.4293
45.0000	3.9156	-3.6531	.7449	1.8084	3.5936	-13.2071	.9497	1.5232
50.0000	3.9121	-4.0273	.8315	1.9492	3.5547	-14.2291	1.0573	1.6093
55.0000	3.9086	-4.3995	.9121	2.0853	3.5183	-15.2178	1.1586	1.6896
60.0000	3.9052	-4.7674	.9873	2.2182	3.4840	-16.1819	1.2551	1.7655
65.0000	3.9019	-5.1345	1.0579	2.3488	3.4516	-17.1275	1.3472	1.8380
70.0000	3.8984	-5.5005	1.1246	2.4779	3. 206	-18.0589	1.4359	1.9076
75.0000	3.8950	-5.8653	1.1881	2.6060	3.3907	-18.9787	1.5220	1.9748
80.0000	3.8916	-6.2293	1.2490	2.7335	3.3618	-19.8887	1.6061	2.0398
85.0000	3.8881	-6.5926	1.3080	2.8605	3.3335	-20.7900	1.6887	2.1025
90.0000	3.8846	-6.9554	1.3655	2.9872	3.3057	-21.6829	1.7701	2.1631
95.0000	3.8811	-7.3176	1.4220	3.1136	3.2784	-22.5677	1.8507	2.2216
100.0000	3.8774	-7.6793	1.4778	3.2399	3.2513	-23.4443	1.9306	2.2778
105.0000	3.8737	-8.0405	1.5332	3.3659	3.2244	-24.3126	2.0101	2.3319
110.0000	3.8699	-8.4015	1.5884	3.4918	3.1977	-25.1723	2.0891	2.3837
115.0000	3.8661	-8.7619	1.6437	3.6173	3.1710	-26.0230	2.1679	2.4333
120.0000	3.8621	-9.0219	1.6993	3.7427	3.1444	-26.8646	2.2463	2.4806
125.0000	3.8581	-9.4815	1.7553	3.8677	3.1178	-27.6966	2.3244	2.5255
130.0000	3.8539	-9.8405	1.8118	3.9923	3.0912	-28.5188	2.4022	2.5681
135.0000	3.8497	-10.1991	1.8689	4.1165	3.0646	-29.3309	2.4796	2.6084
140.0000	3.8453	-10.5571	1.9266	4.2402	3.0381	-30.1326	2.5566	2.6464
145.0000	3.8409	-10.9146	1.9852	4.3635	3.0115	-30.9238	2.6333	2.6822
150.0000	3.8363	-11.2714	2.0445	4.4861	2.9850	-31.7043	2.7094	2.7156
155.0000	3.8316	-11.6277	2.1048	4.6082	2.9585	-32.4739	2.7850	2.7469
160.0000	3.8268	-11.9834	2.1658	4.7296	2.9321	-33.2326	2.8599	2.7760
165.0000	3.8220	-12.3383	2.2278	4.8504	2.9057	-33.9801	2.9343	2.8029
170.0000	3.8170	-12.6926	2.2908	4.9704	2.8793	-34.7166	3.0079	2.8278
175.0000	3.8119	-13.0462	2.3546	5.0896	2.8531	-35.4418	3.0808	2.8506
180.0000	3.8067	-13.3990	2.4194	5.2081	2.8269	-36.1559	3.1529	2.8715
185.0000	3.8014	-13.7510	2.4852	5.3257	2.8008	-36.8588	3.2242	2.8905
190.0000	3.7953	-14.1022	2.5519	5.4425	2.7749	-37.5506	3.2946	2.9077
195.0000	3.7904	-14.4526	2.6195	5.5584	2.7491	-38.2314	3.3640	2.9231
200.0000	3.7843	-14.8022	2.6881	5.6734	2.7234	-38.9011	3.4326	2.9368

TRANSFER FUNCTION FOR NET BENDING FROM 378 B1 PLUS 396 B2 MAGNETS

FREQ (HZ)	MAGNET ALONE TRANSFER FCT. (KG-M)/AMP	MAGNET ALONE TRANSFER FCT. (DEGREES)	MAGNET ALONE AC IMPEDANCE (KOHMS)		MAGNET WITH 10 OHMS TRANSFER FCT. (KG-M)/AMP	MAGNET WITH 10 OHMS TRANSFER FCT. (DEGREES)	MAGNET WITH 10 OHMS AC IMPEDANCE (KOHMS)	
0.0000	18.5039	0.0000	.0051	0.0000	18.4915	0.0000	.0051	0.0000
5.0000	18.5010	-.5733	.0144	.1747	18.4620	-1.8641	.0183	.1740
10.0000	18.4928	-1.1431	.0410	.3456	18.3772	-3.6858	.0562	.3411
15.0000	18.4798	-1.7064	.0823	.5097	18.2471	-5.4323	.1140	.4963
20.0000	18.4628	-2.2611	.1344	.6650	18.0844	-7.0851	.1861	.6369
25.0000	18.4426	-2.8062	.1936	.8111	17.9015	-8.6399	.2668	.7625
30.0000	18.4201	-3.3415	.2567	.9482	17.7084	-10.1015	.3516	.8742
35.0000	18.3960	-3.8676	.3212	1.0773	17.5122	-11.4799	.4376	.9739
40.0000	18.3708	-4.3852	.3855	1.1995	17.3175	-12.7865	.5228	1.0634
45.0000	18.3449	-4.8953	.4485	1.3158	17.1269	-14.0324	.6061	1.1444
50.0000	18.3185	-5.3989	.5098	1.4274	16.9416	-15.2276	.6872	1.2185
55.0000	18.2918	-5.8971	.5692	1.5350	16.7621	-16.3802	.7659	1.2867
60.0000	18.2649	-6.3905	.6266	1.6394	16.5883	-17.4971	.8422	1.3501
65.0000	18.2379	-6.8804	.6822	1.7412	16.4199	-18.5838	.9164	1.4093
70.0000	18.2105	-7.3669	.7363	1.8408	16.2562	-19.6446	.9886	1.4649
75.0000	18.1829	-7.8507	.7889	1.9386	16.0968	-20.6830	1.0590	1.5172
80.0000	18.1551	-8.3323	.8403	2.0348	15.9411	-21.7016	1.1280	1.5667
85.0000	18.1269	-8.8119	.8907	2.1297	15.7886	-22.7026	1.1956	1.6139
90.0000	18.0982	-9.2899	.9404	2.2235	15.6367	-23.6873	1.2620	1.6589
95.0000	18.0690	-9.7662	.9895	2.3162	15.4911	-24.6571	1.3274	1.7001
100.0000	18.0393	-10.2412	1.0382	2.4081	15.3454	-25.6128	1.3919	1.7400
105.0000	18.0090	-10.7147	1.0867	2.4991	15.2013	-26.5551	1.4555	1.7776
110.0000	17.9781	-11.1870	1.1350	2.5893	15.0585	-27.4843	1.5184	1.8136
115.0000	17.9465	-11.6579	1.1833	2.6787	14.9169	-28.4008	1.5806	1.8473
120.0000	17.9142	-12.1275	1.2316	2.7674	14.7763	-29.3049	1.6421	1.8792
125.0000	17.8812	-12.5959	1.2802	2.8554	14.6366	-30.1965	1.7029	1.8092
130.0000	17.8475	-13.0625	1.3289	2.9427	14.4976	-31.0760	1.7631	1.9374
135.0000	17.8129	-13.5281	1.3780	3.0292	14.3594	-31.9432	1.8226	1.9638
140.0000	17.7777	-13.9920	1.4275	3.1150	14.2218	-32.7983	1.8816	1.9885
145.0000	17.7416	-14.4544	1.4773	3.2001	14.0850	-33.6412	1.9398	2.0114
150.0000	17.7049	-14.9152	1.5277	3.2845	13.9488	-34.4719	1.9974	2.0328
155.0000	17.6672	-15.3744	1.5784	3.3681	13.8132	-35.2906	2.0543	2.0525
160.0000	17.6288	-15.8319	1.6297	3.4509	13.6784	-36.0971	2.1105	2.0707
165.0000	17.5897	-16.2875	1.6815	3.5329	13.5443	-36.8915	2.1660	2.0873
170.0000	17.5499	-16.7414	1.7338	3.6141	13.4110	-37.6739	2.2207	2.1025
175.0000	17.5092	-17.1934	1.7866	3.6946	13.2784	-38.4442	2.2747	2.1163
180.0000	17.4679	-17.6435	1.8400	3.7741	13.1467	-39.2026	2.3279	2.1288
185.0000	17.4259	-18.0916	1.8939	3.8529	13.0159	-39.9492	2.3804	2.1399
190.0000	17.3831	-18.5377	1.9484	3.9308	12.8860	-40.6839	2.4320	2.1496
195.0000	17.3397	-18.9818	2.0033	4.0078	12.7570	-41.4069	2.4828	2.1585
200.0000	17.2955	-19. 237	2.0588	4.0839	12.6291	-42.1184	2.5328	2.1660

TRANSFER FUNCTION BETWEEN FIELD AND CURRENT IN MAIN RING BENDING MAGNET(B1)

GAP(IN)	= 1.500	APER(IN)	= 5.000	POLE WIDTH(IN)	= 8.500	YOKE WIDTH(IN)	=25.250
YOKE HEIGHT(IN)	=14.250	YOKE THICKNESS(IN)	= 5.000	LAMINATION THICKNESS(IN)	= .0615	VAC. CHAMB. THICK.(IN)	= .050
IRON RESI.(MUOHM-CM)	=12.000	VAC. CH. RESI.(MUOHM-CM)	=75.500	PERMEABILITY OF IRON	=3000.0	AMPFAC	=1.0056
DC INDUCTANCE(HY)	= .0061	COIL RESIST.(MUOHM-IN)	= .772	COIL CORNER RADIUS(IN)	= .0625	MAGNET LENGTH(IN)	=239.00
NO. TURNS IN INNER COIL	= 4	INNER COIL WIDTH(IN)	= 1.113	INNER COIL HEIGHT(IN)	= .670	INNER COIL HOLEDIAM.(IN)	= .340
NO. TURNS IN OUTER COIL	= 8	OUTER COIL WIDTH(IN)	= 1.096	OUTER COIL HEIGHT(IN)	= .922	OUTER COIL HOLEDIAM.(IN)	= .340

	MAGNET ALONE				MAGNET WITH 10 OHMS			
FREQ (HZ)	TRANSFER FCT. (GAUSS/AMP)	(DEGREES)	AC IMPEDANCE (OHMS)		TRANSFER FCT. (GAUSS/AMP)	(DEGREES)	AC IMPEDANCE (OHMS)	
0.0000	3.9359	0.0000	.0059	0.0000	3.9336	0.0000	.0059	0.0000
250.0000	3.4695	-29.8794	3.3995	5.5922	2.3891	-52.5422	3.6450	2.6523
500.0000	2.7447	-51.6815	7.0994	7.4396	1.4721	-75.2218	5.0847	2.1374
750.0000	2.1425	-66.6290	9.7044	7.6969	1.0131	-88.0109	5.5996	1.7159
1000.0000	1.7075	-77.4203	11.2242	7.5732	.7579	-97.1205	5.8238	1.4853
1250.0000	1.3936	-85.7660	12.3838	7.4251	.5911	-104.1983	5.9791	1.3270
1500.0000	1.1605	-92.5773	13.2648	7.3207	.4760	-110.1430	6.0931	1.2206
1750.0000	.9820	-98.3453	13.9856	7.2580	.3920	-115.2989	6.1853	1.1436
2000.0000	.8415	-103.3550	14.6067	7.2225	.3283	-119.8482	6.2636	1.0839
2250.0000	.7284	-107.7731	15.1596	7.2017	.2785	-123.9001	6.3320	1.0359
2500.0000	.6358	-111.7094	15.6613	7.1865	.2387	-127.5270	6.3925	.9932
2750.0000	.5588	-115.2376	16.1218	7.1717	.2064	-130.7812	6.4466	.9563
3000.0000	.4940	-118.4101	16.5468	7.1544	.1798	-133.7033	6.4950	.9231
3250.0000	.4390	-121.2652	16.9404	7.1332	.1576	-136.3259	6.5385	.8928
3500.0000	.3920	-123.8370	17.3053	7.1080	.1390	-138.6766	6.5778	.8648
3750.0000	.3514	-126.1476	17.6440	7.0792	.1232	-040.7791	6.6132	.8390
4000.0000	.3163	-128.2193	17.9584	7.0476	.1098	-142.6542	6.6453	.8150
4250.0000	.2857	-130.0703	18.2504	7.0141	.0982	-144.3201	6.6744	.7927
4500.0000	.2589	-131.7170	18.5219	6.9797	.0882	-145.7933	6.7010	.7720
4750.0000	.2353	-133.1739	18.7745	6.9453	.0796	-147.0886	6.7253	.7527
5000.0000	.2145	-134.4543	19.0098	6.9116	.0720	-148.2193	6.7477	.7348
5250.0000	.1962	-135.5705	19.2294	6.8793	.0654	-149.1978	6.7683	.7182
5500.0000	.1800	-136.5338	19.4347	6.8490	.0596	-150.0354	6.7874	.7028
5750.0000	.1655	-137.3549	19.6271	6.8210	.0545	-150.7424	6.8051	.6884
6000.0000	.1526	-138.0436	19.8079	6.7958	.0499	-151.3286	6.8218	.6751
6250.0000	.1410	-138.6096	19.9781	6.7736	.0459	-151.8030	6.8374	.6627
6500.0000	.1307	-139.0616	20.1390	6.7545	.0423	-152.1742	6.8521	.6512
6750.0000	.1214	-139.4093	20.2915	6.7387	.0391	-152.4502	6.8661	.6405
7000.0000	.1130	-139.6576	20.4365	6.7260	.0363	-152.6385	6.8794	.6305
7250.0000	.1054	-139.8173	20.5749	6.7166	.0337	-152.7463	6.8922	.6212
7500.0000	.0985	-139.8947	20.7073	6.7104	.0314	-152.7804	6.9045	.6125
7750.0000	.0924	-139.8969	20.8345	6.7073	.0293	-152.7472	6.9163	.6044
8000.0000	.0869	-139.8301	20.9571	6.7071	.0274	-152.6527	6.9278	.5969
8250.0000	.0817	-139.7011	21.0755	6.7097	.0257	-152.5028	6.9389	.5897
8500.0000	.0771	-139.5155	21.1904	6.7151	.0242	-152.3028	6.9497	.5831
8750.0000	.0728	-139.2792	21.3021	6.7229	.0228	-152.0579	6.9603	.5768
9000.0000	.0689	-138.9973	21.4109	6.7332	.0215	-151.7729	6.9707	.5708
9250.0000	.0654	-138.6748	21.5174	6.7457	.0203	-151.4522	6.9809	.5652
9500.0000	.0621	-138.3165	21.6217	6.7602	.0192	-151.1003	6.9909	.5596
9750.0000	.0591	-137.9267	21.7241	6.7766	.0182	-150.7209	7.0008	.5547
10000.0000	.0564	-137.5095	21.8249	6.7948	.0173	-150.3177	7.0105	.5499

TRANSFER FUNCTION BETWEEN FIELD AND CURRENT IN MAIN RING BENDING MAGNET(B2)

GAP(IN)	= 2.000	APER(IN)	= 4.000	POLE WIDTH(IN)	= 7.500	YOKE WIDTH(IN)	=25.250
YOKE HEIGHT(IN)	=14.250	YOKE THICKNESS(IN)	= 4.750	LAMINATION THICKNESS(IN)	= .0615	VAC. CHAMB. THICK.(IN)	= .050
IRON REST.(MUOHM-CM)	=12.000	VAC. CH. REST.(MUOHM-CM)	=75.500	PERMEABILITY OF IRON	=3000.0	AMPFAC	=1.0045
DC INDUCTANCE(HY)	= .0082	COIL RESIST.(MUOHM-IN)	= .772	COIL CORNER RADIUS(IN)	= .0625	MAGNET LENGTH(IN)	=239.00
NO. TURNS IN INNER COIL	= 4	INNER COIL WIDTH(IN)	= 1.096	INNER COIL HEIGHT(IN)	= .922	INNER COIL HOLEDIAM.(IN)	= .340
NO. TURNS IN OUTER COIL	= 12	OUTER COIL WIDTH(IN)	= 1.096	OUTER COIL HEIGHT(IN)	= .922	OUTER COIL HOLEDIAM.(IN)	= .445

	MAGNET ALONE				MAGNET WITH 10 OHMS			
FREQ (HZ)	TRANSFER FCT. (GAUSS/AMP)	TRANSFER FCT. (DEGREES)	AC IMPEDANCE (OHMS)	AC IMPEDANCE (OHMS)	TRANSFER FCT. (GAUSS/AMP)	TRANSFER FCT. (DEGREES)	AC IMPEDANCE (OHMS)	AC IMPEDANCE (OHMS)
0.0000	3.9477	0.0000	.0073	0.0000	3.9373	0.0000	.0073	0.0000
250.0000	3.7223	-18.2458	3.4219	6.7683	2.4770	-45.0175	4.0611	2.9951
500.0000	3.3097	-33.6216	7.7972	10.5530	1.5995	-64.3194	5.8455	2.4624
750.0000	2.8495	-45.6263	11.7191	12.0001	1.1483	-74.6000	6.4761	1.9436
1000.0000	2.4377	-54.7720	14.9636	12.0839	.8778	-80.8606	6.7688	1.5708
1250.0000	2.0990	-61.8124	17.3620	11.8452	.7039	-85.3139	6.9264	1.3216
1500.0000	1.8230	-67.3547	19.1327	11.3428	.5833	-88.7418	7.0239	1.0470
1750.0000	1.6003	-71.8234	20.4681	10.8258	.4951	-91.5183	7.0906	1.0192
2000.0000	1.4183	-75.5044	21.5040	10.3487	.4279	-93.8434	7.1400	.9223
2250.0000	1.2677	-78.5904	22.3307	9.9270	.3750	-95.8337	7.1787	.8464
2500.0000	1.1416	-81.2139	23.0075	9.5607	.3323	-97.5623	7.2103	.7854
2750.0000	1.0349	-83.4678	23.5742	9.2448	.2973	-99.0778	7.2370	.7355
3000.0000	.9437	-85.4194	24.0578	8.9731	.2680	-100. 146	7.2602	.6939
3250.0000	.8643	-87.1185	24.4771	8.7395	.2433	-101.5981	7.2807	.6587
3500.0000	.7963	-88.6030	24.8458	8.5389	.2221	-102.6478	7.2990	.6286
3750.0000	.7367	-89.9028	25.1738	8.3669	.2037	-103.5794	7.3157	.6025
4000.0000	.6834	-91.0417	25. 687	8.2198	.1878	-104.4061	7.3309	.5799
4250.0000	.6365	-92.0393	25.7363	8.0947	.1738	-105.1391	7.3451	.5600
4500.0000	.5947	-92.9121	25.9812	7.9889	.1614	-105.7879	7.3584	.5425
4750.0000	.5573	-93.6741	26.2072	7.9004	.1505	-106.3610	7.3709	.5269
5000.0000	.5237	-94.3376	26.4174	7.8273	.1407	-106.8662	7.3828	.5131
5250.0000	.4934	-94.9131	26.6143	7.7680	.1319	-107.3103	7.3942	.5007
5500.0000	.4661	-95.4101	26.8000	7.7212	.1240	-107.6993	7.4051	.4896
5750.0000	.4417	-95.8369	26.9763	7.6855	.1169	-108.0389	7.4157	.4796
6000.0000	.4186	-96.2011	27.1447	7.6599	.1104	-108.3341	7.4261	.4705
6250.0000	.3979	-96.5094	27.3066	7.6433	.1045	-108.5895	7.4362	.4623
6500.0000	.3790	-96.7670	27.4629	7.6349	.0992	-108.8094	7.4460	.4548
6750.0000	.3616	-96.9820	27.6147	7.6337	.0943	-108.9973	7.4558	.4478
7000.0000	.3457	-97.1567	27.7627	7.6391	.0898	-109.1569	7.4654	.4415
7250.0000	.3310	-97.2965	27.9076	7.6503	.0856	-109.2912	7.4749	.4356
7500.0000	.3174	-97. 053	28.0500	7.6666	.0818	-109.4030	7.4843	.4301
7750.0000	.3049	-97.4858	28.1903	7.6874	.0783	-109.4948	7.4937	.4249
8000.0000	.2931	-97.5442	28.3290	7.7124	.0750	-109.5689	7.5030	.4201
8250.0000	.2822	-97.5805	28.4663	7.7408	.0720	-109.6274	7.5122	.4155
8500.0000	.2721	-97.5982	28.6026	7.7724	.0692	-109.6721	7.5214	. 111
8750.0000	.2627	-97.5995	28.7381	7.8067	.0665	-109.7046	7.5306	.4060
9000.0000	.2539	-97.5870	28.8729	7.8433	.0641	-109.7266	7.5397	.4026
9250.0000	.2455	-97.5621	29.0073	7.8819	.0618	-109.7391	7.5487	.3986
9500.0000	.2379	-97.5257	29.1414	7.9222	.0596	-109.7436	7.5578	.3950
9750.0000	.2306	-97.4822	29.2752	7.8639	.0576	-109.7409	7.5667	.3912
10000.0000	.2238	-97.4299	29.4089	8.0068	.0557	-109.7321	7.5757	.3875

TRANSFER FUNCTION FOR NET BENDING FROM 378 B1 PLUS 396 B2 MAGNETS

FREQ (HZ)	MAGNET ALONE TRANSFER FCT. (KG-M)/AMP	MAGNET ALONE TRANSFER FCT. (DEGREES)	MAGNET ALONE AC IMPEDANCE (KOHMS)		MAGNET WITH 10 OHMS TRANSFER FCT. (KG-M)/AMP	MAGNET WITH 10 OHMS TRANSFER FCT. (DEGREES)	MAGNET WITH 10 OHMS AC IMPEDANCE (KOHMS)	
0.0000	18.5038	0.0000	.0051	0.0000	18.4915	0.0000	.0051	0.0000
250.0000	16.8220	-23.7207	2.6401	4.7941	11.4123	-48.6243	2.8860	2.1886
500.0000	14.0779	-41.5937	5.7713	6.9912	7.1907	-69.4171	4.2369	1.7831
750.0000	11.5727	-54.3845	8.3090	7.6615	5.0506	-80.7281	4.6812	1.4183
1000.0000	9.5956	-63.8187	10.1683	7.6875	3.8112	-88.2017	4.8819	1.1835
1250.0000	8.0710	-71.0595	11.5564	7.4974	3.0077	-93.7072	5.0030	1.0250
1500.0000	6.8857	-76.8406	12.5906	7.2590	2.4518	-98.0972	5.0847	.9156
1750.0000	5.9489	-81.5615	13.3919	7.0305	2.0457	-101.7311	5.1459	.8359
2000.0000	5.1956	-85.5026	14.0369	6.8282	1.7372	-104.8025	5.1951	.7749
2250.0000	4.5799	-88.8407	14.5733	6.6533	1.4958	-107.4284	5.2362	.7264
2500.0000	4.0694	-91.6958	15.0309	6.5025	1.3025	-109.6863	5.2717	.6865
2750.0000	3.6411	-94.1526	15.4294	6.3719	1.1450	-111.6317	5.3027	.6528
3000.0000	3.2780	-96.2733	15.7816	6.2577	1.0148	-113.3072	5.3302	.6237
3250.0000	2.9673	-98.1053	16.0964	6.1572	.9058	-114.7467	5.3547	.5983
3500.0000	2.6994	-99.6962	16.3803	6.0682	.8137	-115.9783	5.3768	.5758
3750.0000	2.4669	-101.0463	16.6383	5.9892	.7352	-117.0262	5.3968	.5557
4000.0000	2.2640	-102.2113	16.8739	5.9190	.6677	-117.9109	5.4150	.5377
4250.0000	2.0859	-103.2029	17.0902	5.8568	.6093	-118.6509	5.4316	.5214
4500.0000	1.9298	-104.0393	17.2898	5.8019	.5585	-119.2623	5.4469	.5066
4750.0000	1.7897	-104.7393	17.4748	5.7539	.5140	-119.7596	5.4611	.4932
5000.0000	1.6661	-105.3159	17.6470	5.7122	.4749	-120.1557	5.4742	.4810
5250.0000	1.5557	-105.7832	17.8080	5.6765	.4404	-120.4623	5.4865	.4698
5500.0000	1.4570	-106.1533	17.9591	5.6465	.4097	-120.6900	5.4981	.4595
5750.0000	1.3683	-106.4371	18.1017	5.6218	.3824	-120.8484	5.5090	.4501
6000.0000	1.2883	-106.6446	18.2367	5.6021	.3579	-120.9459	5.5193	.4415
6250.0000	1.2161	-106.7849	18.3651	5.5872	.3360	-120.9905	5.5292	.4336
6500.0000	1.1506	-106.8662	18.4879	5.5756	.3162	-120.9892	5.5387	.4262
6750.0000	1.0912	-106.8950	18.6056	5.5702	.2983	-120.9481	5.5479	.4194
7000.0000	1.0370	-106.8808	18.7190	5.5675	.2821	-120.8730	5.5567	.4132
7250.0000	.9875	-106.8269	18.8287	5.5684	.2674	-120.7689	5.5653	.4075
7500.0000	.9422	-106.7396	18.9352	5.5725	.2539	-120.6404	5.5737	.4019
7750.0000	.9007	-106.6239	19.0388	5.5796	.2416	-120.4914	5.5819	.3968
8000.0000	.8624	-106.4840	19.1401	5.5894	.2304	-120.3256	5.5899	.3920
8250.0000	.8272	-106.3239	19.2392	5.6016	.2200	-120.1461	5.5977	.3875
8500.0000	.7946	-106.1470	19.3366	5.6162	.2104	-119.9556	5.6055	.3832
8750.0000	.7644	-105.9564	19.4325	5.6327	.2016	-119.7566	5.6131	.3791
9000.0000	.7364	-105.7547	19.5270	5.6511	.1935	-119.5511	5.6206	.3753
9250.0000	.7104	-105.5443	19.6205	5.6711	.1859	-119.3411	5.6281	.3716
9500.0000	.6861	-105.3273	19.7130	5.6925	.1788	-119.1279	5.6354	.3680
9750.0000	.6635	-105.1053	19.8047	5.7153	.1723	-118.9131	5.6427	.3646
10000.0000	.6423	-104.8801	19.8957	5.7391	.1661	-118.6978	5.6500	.3613