Fermilab

TM-1164
2558.000
Feb. 2, 1983

# THE LAB 6 WINDING FACILITY

J. Guerra, S. Hansen, and C. Mangene

This note describes the winding machine installed by the facility support group at lab 6 in the Fermilab village. It is available for use by outside users and groups within the lab. The machine can wind wire planes whose longest dimension is less than 10'. The wire spacing range has an upper practical limit of about 5mm. Spacing beyond this requires a very long index time and therefore slows down the winding speed prohibitively.

The maximum rotation speed of the winding armature is approximately 6 r.p.m.. The winder can run at full speed with spacings up to about 2mm. Wider spacings will slow the maximum winding rate proportionally. Spacing is set by loading a preset number of pulses into a stepping motor which is coupled by a cog belt drive to a high precision lead screw. The lead screw has a pitch of twenty threads per inch, and the stepping motor requires 200 counts for one complete revolution. The ratio of the cog belt drive is two to one which results in a lead screw motion of .0005" per pulse into the stepping motor. A separate motor for fast indexing is supplied to return the tensioner relatively rapidly to its starting position thereby reducing the time between winds.

The tensioner consists of three parts:

1. A pivoting counter-weighted arm over which the wire is looped
2. A position sensor which puts out a signal which varies according to the attitude of the tensioning arm.
3. A servo driver which uses the signal from the position sensor to drive the tensioning motor, whose output shaft is the spindle upon which the wire spool is mounted.

These parts form a closed loop feedback system which imparts a constant tension on the wire. It is adjustable from essentially zero to an upper limit of approximately 300 gramms. For any given tension the variation in tension during wind should be less than 10%. The gain of the feedback loop can be adjusted for more or less precision, trading off high loop gain with soft start characteristics. If the gain is set too high, it becomes very difficult to start the tensioner without breaking the wire, since the correction signal (and thereby the motor torque) is large for any initial deviation from the nominal running attitude of the tensioning arm.

The winding machine is fitted with adjustable limits which when reached, halts the winder. These are used to determine the size of the wind. There is an additional pair of fixed limits at the extremes of the travel of the tensioning carriage which function as back-ups to the adjustable limits. The adjustable limits can simply be slid along their rails to the appropriate stop point.

The attitude of the winding platter at the onset of the indexing sequence can be adjusted at the east side of the armature shaft by loosening and rotating the cam which detents the indexing switch. The indexing switch starts the preset pulse train which turns the indexing motor a prescribed amount.

In addition to the winder itself, the winding room in lab 6 will have a flat table for soldering the planes and various tools peculiar to the chamber building trade such as hemostats, glue, tongue-depressors, optical eyepieces etc. will be available. An overhead crane is being installed to facilitate moving large wireplanes and gas boxes around within the work area. The room will be fitted with an electrostatic air cleaning system for keeping dust levels low.

The pages following give two views of the winding machine, a sample set of instructions, and mechanical and electrical schematics.

INSTRUCTIONS FOR WINDER USE

1: SECURE TRANSFER FRAMES TO WINDER FRAME. ALONG THE FRAME EDGES WHICH THE WIRES PASS OVER, APPLY A 1" STRIP OF DOUBLE FACED TAPE TO HOLD THE WIRES IN THEIR PROPER POSITIONS DURING THE WIND.

2: SET THE ADJUSTABLE LIMITS APPROXIMATELY 2" BEYOND THE ANTICIPATED BEGINNING AND END POINTS OF THE WIND.

3: SET THE TENSIONING CARRIAGE TO THE EAST ADJUSTABLE LIMIT. TO DO SO, CHANGE THE INDEXING DRIVE BELT ON THE EAST END OF THE LEAD SCREW FROM THE SLO-SYN MOTOR (THE SMALLER OF THE TWO) TO THE FAST INDEX MOTOR (THE LARGER OF THE TWO). SET FORWARD/REVERSE TO REVERSE, INDEX ON/OFF TO ON, AND INDEX FAST/SLOW TO FAST. THE CARRIAGE WILL STOP AT THE EAST LIMIT. PUSH LIMIT OVERRIDE FOR A SECOND OR TWO TO BACK THE CARRIAGE OFF THE LIMIT SWITCH.WHEN THIS STEP IS COMPLETED, RETURN THE INDEX DRIVE BELT TO THE SLO-SYN MOTOR.

4: MOUNT A SPOOL OF DESIRED WIRE TO THE SPINDLE ON THE TENSIONING MOTOR.THE WIRE SHOULD COME OFF THE TOP OF THE SPOOL. THREAD THE WIRE UNDER THE FIRST PULLEY,OVER THE PULLEY ON THE TENSIONING ARM, AND UNDER THE THIRD PULLEY. LEAD THE WIRE OUT TO THE TRANSFER FRAME TO A POINT SLIGHTLY EAST OF THE CARRIAGE AND ATTACH IT TO THE FRAME WITH A PIECE OF DUCT TAPE. FOR LARGE TENSION SETTINGS AS ARE USED FOR WINDING CATHODE PLANES, LEAVE SOME WIRE PRO- TRUDING FROM UNDER THE TAPE, FOLD IT BACK OVER THE TAPE AND SECURE THE WIRE A SECOND TIME WITH ANOTHER PIECE OF TAPE.

5: SET THE THE TENSION TO THE DESIRED VALUE BY ROTATING THE SCALE ON THE COUNTER-WEIGHT. EACH FULL TURN COUNTER-CLOCKWISE FROM THE BALANCE POINT IS TEN GRAMS OF TENSION.

6: SET THE WIRE SPACING BY SETTING THE PRESET COUNTS ON THE SLO-SYN INDEXER. 341.4 COUNTS IS 1MM.

7: TURN THE TENSION SWITCH ON. THERE IS A TRIP SWITCH ON THE ARM OF THE TENSIONER. ROTATE THE WIRE SPOOL BACKWARDS BY HAND UNTIL THE TENSION OF THE WIRE PULLS THE TENSIONING ARM DOWN OFF THE TRIP SWITCH. AT THIS POINT THE TENSIONER WILL START FUNCTIONING AND THE ARM SHOULD PULL ITSELF DOWN TO A LEVEL ATTITUDE.

8: ADJUST THE TIMING OF THE INDEX SWITCH BY LOOSENING THE SET SCREW ON THE CAM AT THE WEST END OF THE SHAFT OF THE FRAME AND ROTATING THE CAM TO THE DESIRED POINT. INDEXING SHOULD OCCUR WHEN THE WIRE IS BETWEEN THE FRAME EDGES. AVOID INDEXING AS THE WIRE COMES INTO CONTACT WITH A NEW EDGE.

9: THE WIND SHOULD BE READY TO START. SET THE FRAME SPEED TO ZERO. SET FORWRD/REVERSE TO FORWARD, INDEX FAST/SLOW TO SLOW, INDEX ON/OFF TO ON AND FINALLY, CLUTCH/BRAKE TO CLUTCH. TURN UP THE FRAME SPEED SLOWLY AND CHECK TO SEE THAT THE INDEX IS INCREMENTING PROPERLY. THE FRAME SPEED IS LIMITED BY THE INDEX

TIMING. THE INDEXING MOTOR SHOULD COMPLETE ITS INCREMENT BETWEEN TWO CORNERS OF THE WINDING FRAME. THE WIND WILL CONTINUE UNTIL IT REACHES THE WEST LIMIT. AT THAT POINT, BOTH INDEXING AND ROTATION WILL STOP, BUT TENSION WILL REMAIN ON. IF THE WIRE SHOULD BREAK, OR THE SPOOL RUN OUT OF WIRE DURING THE WIND, THE TENSIONING ARM WILL HIT THE TRIP SWITCH AND THE WINDER WILL STOP.

10: IN CASE OF DIFFICULTY CALL STEN HANSEN AT 4885 OR CHUCK MANGENE AT 3614.

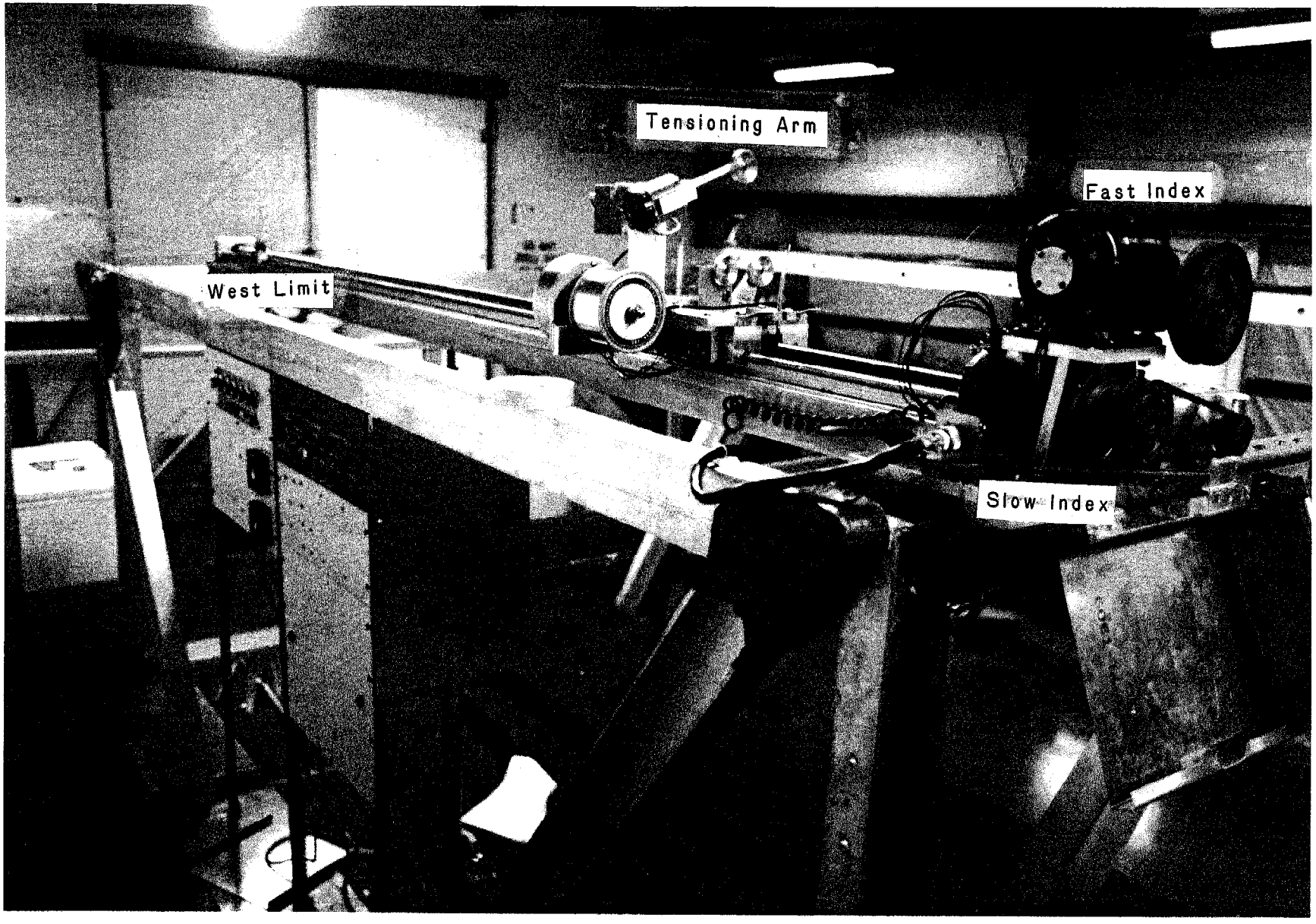
Tensioning Arm
Fast Index
West Limit
Slow Index

# LAB-6 WINDING MACHINE

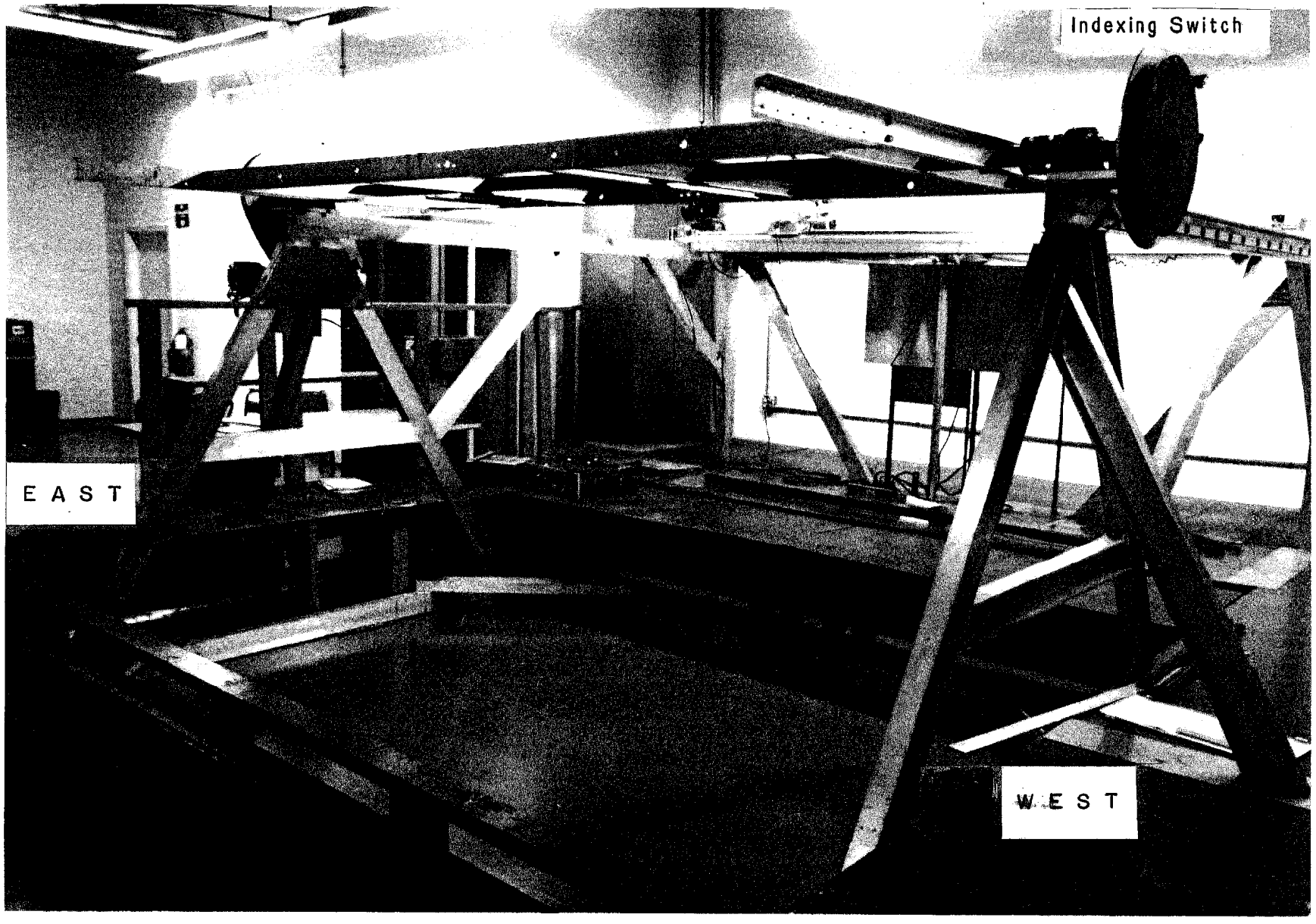

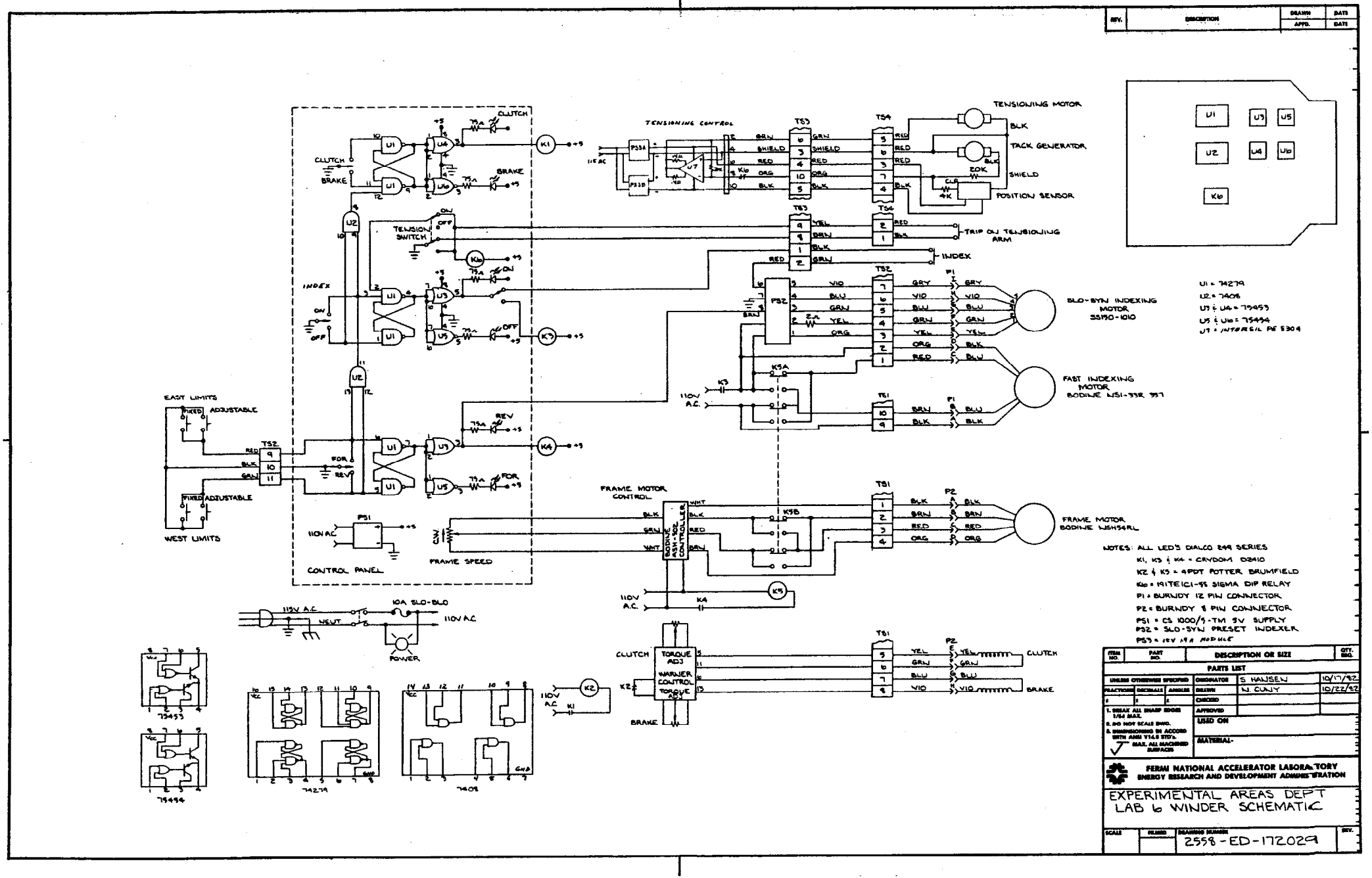
TENSIONING CONTROL
TENSIONING MOTOR
TACK GENERATOR
POSITION SENSOR
TRIP ON TENSIONING ARM
INDEX
SLO-SYN INDEXING MOTOR SS150-1010
FAST INDEXING MOTOR BODINE NSI-33R 357
FRAME MOTOR BODINE NSH54RL
FRAME MOTOR CONTROL
FRAME SPEED
CONTROL PANEL
EAST LIMITS
WEST LIMITS
CLUTCH
BRAKE
TENSION SWITCH
U1 = 74279
U2 = 7406
U3 & U4 = 75453
U5 & U6 = 75454
U7 = INTERSIL AF 5304
NOTES: ALL LED'S DIALCO 249 SERIES
K1, K3 & K4 = CRYDOM D2410
K2 & K5 = 4PDT POTTER BRUMFIELD
K6 = 191TE1C1-55 SIGMA DIP RELAY
P1 = BURNDY 12 PIN CONNECTOR
P2 = BURNDY 8 PIN CONNECTOR
PS1 = CS 1000/5-TM 5V SUPPLY
PS2 = SLO-SYN PRESET INDEXER
PS3 = 18V 19A MODULE
FERMI NATIONAL ACCELERATOR LABORATORY
ENERGY RESEARCH AND DEVELOPMENT ADMINISTRATION
EXPERIMENTAL AREAS DEPT
LAB 6 WINDER SCHEMATIC
2558-ED-172029

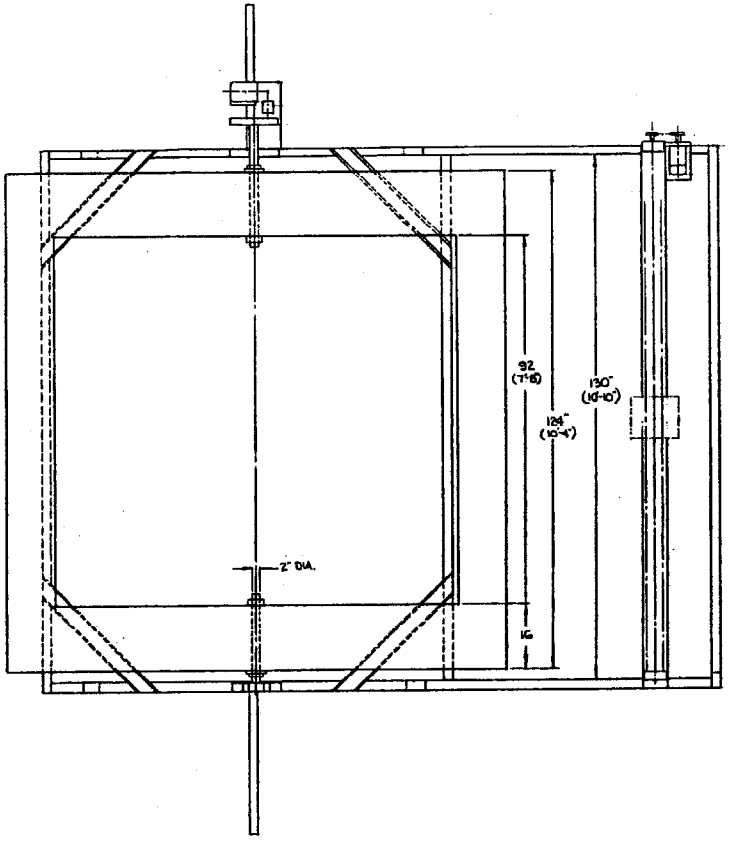


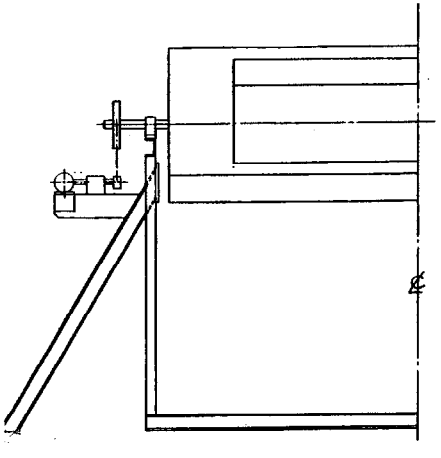

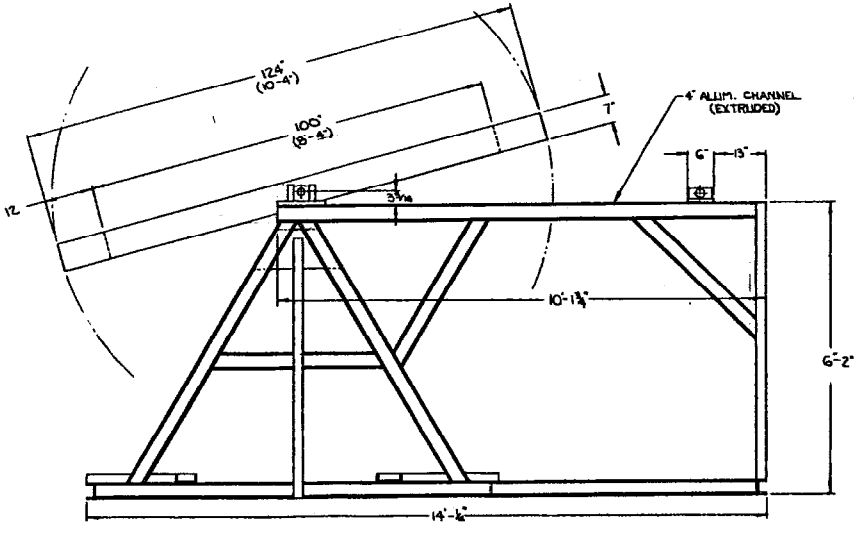


SCALE: 1" = 1'-0"

0 1" 2" 3"

| | | | |
|---|---|---|---|
| PART NO. | DESCRIPTION OR SIZE | | REQ'D. |
| PARTS LIST | | | |
| DIMENSIONS SPECIFIED | CONTRACTOR | | |
| FRACTIONAL / DECIMAL / ANGULAR | DRAWN | GARY SMITH | 1-28-85 |
| | CHECKED | | |
| 1. BREAK ALL SHARP EDGES LAB MAX. | APPROVED | | |
| 2. DO NOT SCALE DWG. | USED ON | | |
| 3. DIMENSIONS IN ACCORD WITH ANSI Y14.5M-1982 | MATERIAL- | | |
| 4. MAX. ALL MACHINED SURFACE | | | |

FERMI NATIONAL ACCELERATOR LABORATORY
UNITED STATES DEPARTMENT OF ENERGY

FACILITIES SUPPORT
WINDING MACHINE
(LAB 6)

SCALE | DRAWN | DRAWING NUMBER | REV.