Fermi National Accelerator Laboratory

TM-1432
9204.000

# Meson West Beamline Spoiler Magnets Electrical Design and Test Report

A.T. Visser
Fermi National Accelerator Laboratory, Batavia, IL, 60510 U.S.A.

November 25, 1986

Operated by Universities Research Association Inc. under contract with the United States Department of Energy

# CONTENTS

1. Summary

2. Physical Description

3. Coil Design

4. Measurement of the Average Magnetic Field Strength in the Steel

5. Beam Hole Stray Field and Shielding

6. Acknowledgement

7. Figures 1 through 13

## 1. SUMMARY

This note describes the construction of five spoiler magnets installed in the secondary beamline to the Meson West Experimental Hall (Exp. #706). Tests have been performed to measure the magnetic field in the steel as a function of the excitation current. B versus I curves for each spoiler are included. The leakage field in the beam pipe through the spoiler steel was too high. Magnetic shields and reduced excitation are used to lower this leakage field to acceptable levels.

## 2. PHYSICAL DESCRIPTION

Figures 1, 2 and 3 summarize the overall dimensions of the spoiler magnets. They are quite large. Each spoiler magnet is assembled from distressed steel plates of various thicknesses in the order of 7.5" to 11.5". These plates are stacked together to form the spoiler steel assembly. The mating surfaces, where the flux crosses, are machined flat to reduce air gaps. An evacuated beam pipe is inserted through a bored hole in the spoiler steel (S1, S2) or inserted in a machined slot with a filler plug (S3, S4, S5).

It is very costly to machine the large pieces of steel flat. The Mechanical Group has been rather successful to keep air gaps to a minimum. However, here and there air gaps, in the order of several mm, could be found especially at S2. The filler plug should also fit tightly to reduce the stray field in the beam pipe and allow good field distribution above and below the beam pipe. The excitation coil is installed close to the beam pipe for the best field distribution in that area. The magnetic properties of the steel and the size of the air gaps are always a question. The steel is not homogeneous and the gaps vary from place to place. Educated guesses have to be made to calculate the excitation required for about 17 KG field in the area of the beam pipe. The average value of this field is later on checked by installing a loop of wire around the steel and integrating the change of flux resulting from a change in excitation current. For calculations of the excitation we will assume that the steel is "as hot rolled C1030", (Fig. 4) and that the total air gap crossed by the magnetic flux is 0.01". This is in reasonable agreement with measured results from previous designs (Ref. 1).

## 3. COIL DESIGN

It is the least expensive to run all five spoilers in series from one power supply. The number of turns in each coil can be chosen to yield the required field strength. Space limitations require the use of a water cooled coil. We can choose a current density of about 2500 A/inch$^2$ to keep the coil losses reasonable. Higher current densities can be used as long as we are willing to pay for the losses and cooling is adequate. The final choice for the coil conductor was booster cooper, because it was on hand at Fermilab. The properties of the booster cooper are shown below.

BOOSTER COPPER

$A = 0.153\ in^2$

$A = 0.9872\ cm^2$

$W = 0.59$ lbs/ft

$\rho_{20} = 1.7241 \times 10^{-6}\ \Omega$ cm (at 20°C)

$\rho_{60} = 2 \times 10^{-6}\ \Omega$ cm (at 60°C)

$R_{20} \approx 54.6 \times 10^{-6}\ \Omega$/ft

$R_{60} \approx 63.4 \times 10^{-6}\ \Omega$/ft

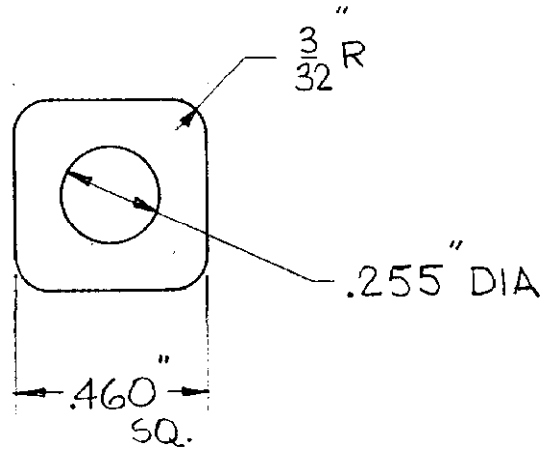


We will use an average operating temperature of 60°C for loss calculation. The conductor cross section is 0.153 in$^2$, which permits 0.153 x 2500 = 382 Amp DC max.

We will initially choose an operating current of 350 Amp DC, which can be supplied through one 500 MCM, 90°C cable, rated 400 Amp DC. It is now possible to calculate the number of coil turns, because we know the dimensions of the spoiler steel, the required field strength, the operating current and we have made reasonable assumptions for the type of steel and the air gaps.

We will calculate the required AmpereTurns for 17 KG over the average iron length. Inside this loop the flux will be higher and outside, it will be lower. No adjustments are made for higher induction around the beam pipe area, since the effect is small and the errors resulting from steel and air gap assumptions could be much larger.

The average iron length through which the flux travels can be found from Fig. 1, 2 and 3. It takes 70 Oersteds or 5600 AmpereTurns per meter or 142 AT/inch to drive 17 KG through the iron (from Fig. 4).

The 0.01" air gap requires:

$$NI_{air} = \frac{1.7}{4\pi \times 10^{-7}} \times 0.01 \times 2.54 \times 10^{-2}$$

$$NI_{air} \sim 350 \text{ AT at } 17 \text{ KG}/0.01''$$

Make the following table:

| Spoiler Magnet | Average Iron Length at 17 KG | $NI_{iron}$ | $NI_{air}$ 0.01 in. | $NI_{total}$ | Minimum Required Coil Turns at 350 A | Chosen* Coil Turns | Final** Choice Coil Turns |
|---|---|---|---|---|---|---|---|
| | INCH | AT | AT | AT | N | N | N |
| S1 | 322 | 45,724 | 350 | 46,074 | 132 | 132 | 68 |
| S2 | 292.5 | 41,535 | 350 | 41,885 | 120 | 120 | 120 |
| S3 | 94 | 13,348 | 350 | 13,698 | 39 | 40 | 20 |
| S4 | 94 | 13,348 | 350 | 13,698 | 39 | 40 | 20 |
| S5 | 94 | 13,348 | 350 | 13,698 | 39 | 40 | 20 |

* Coils are made in 4 layers. Coil construction is easier with chosen N.

** Later on we will discover from tests, that it is better to operate S1, S3, S4 and S5 at half the number of coil turns, because the stray field in the air gap is too high. Coils have been constructed with the chosen number of coil turns, and modified in the field. Modification was fortunately very simple.

## 3.1 S1 Coil Design

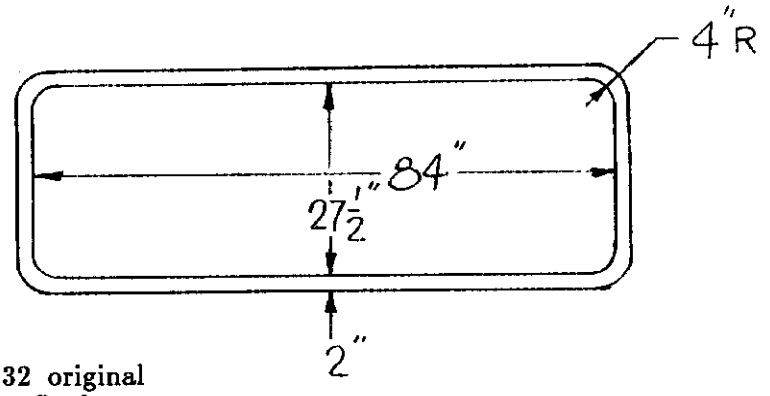


Turns - 132 original
- 66 final

| | 66 Turn Modif. | 132 T Original |
|---|---|---|
| Average turn length | 235 inch | 235 |
| Cu length | 2585 ft | 2585 |
| Cu weight | 1525 lbs | 1525 |
| $R_{60}$ | $41 \times 10^{-3}\ \Omega$ | $164 \times 10^{-3}\ \Omega$ |
| $V_{60,350A}$ | 14.4 Volt | 57.4 |
| $KW_{60,350A}$ | 5 KW | 20.1 |
| Req'd flow for $\Delta T=38^{o}C$ | 0.5 GPM | 2 |
| Assume available $\Delta P$ in tunnel at spoiler | 100 PSI | 100 |
| Estimated flow (4 par. circuits) at 100 psi | 2.7 GPM | 2.7 |
| Coil temp rise $\Delta T$ | $7^{o}C$ | $28^{o}C$ |
| Insulation rating | $120^{o}C$ | $120^{o}C$ |

Choose:

Coil Cross Section

COIL CROSSECTION

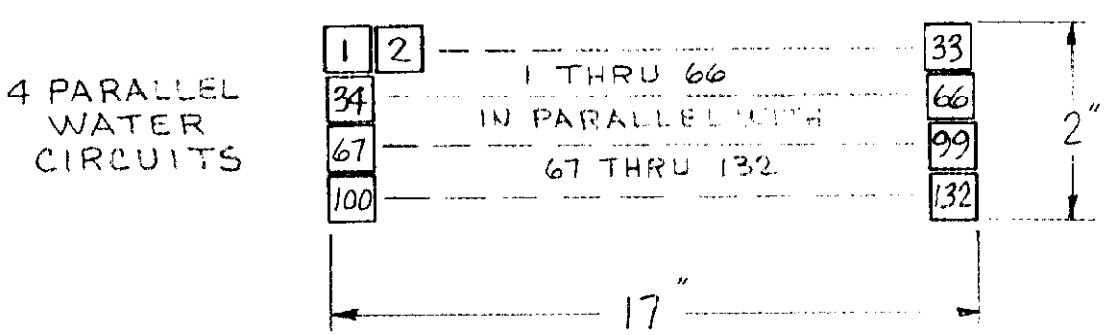

## 3.2 S2 Coil Design

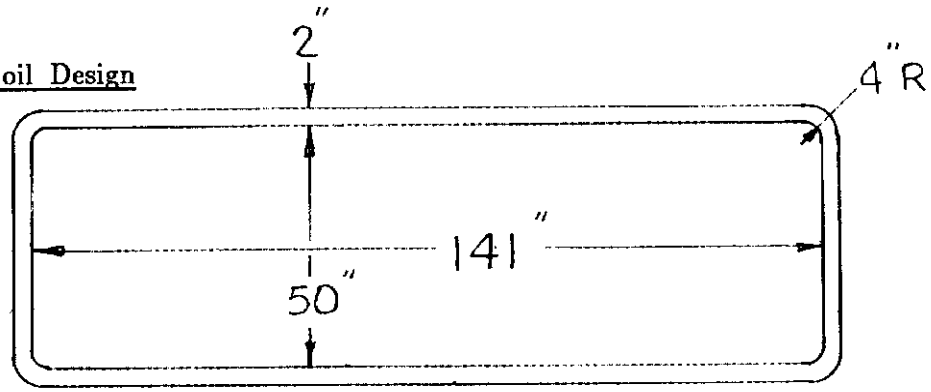


| | |
|---|---|
| Turns | 120 |
| Average turn length | 394 inch |
| Cu length | 3940 ft |
| Cu weight | 2325 lbs |
| $R_{60}$ | $250 \times 10^{-3}\ \Omega$ |
| $V_{60,350}$ | 87.4 V |
| $KW_{60,350}$ | 30.6 KW |
| Req'd flow for $\Delta T = 38^{o}C$ | 3 GPM |
| $\Delta P$ | 100 PSI |
| Flow (4 par. circuits at $\Delta P = 100$ psi) | 2 GPM |
| Coil temperature rise $\Delta T$ | $58^{o}C$ |
| Insulation rating | $120^{o}C$ |

Choose:

Coil Cross Section

COIL CROSSECTION

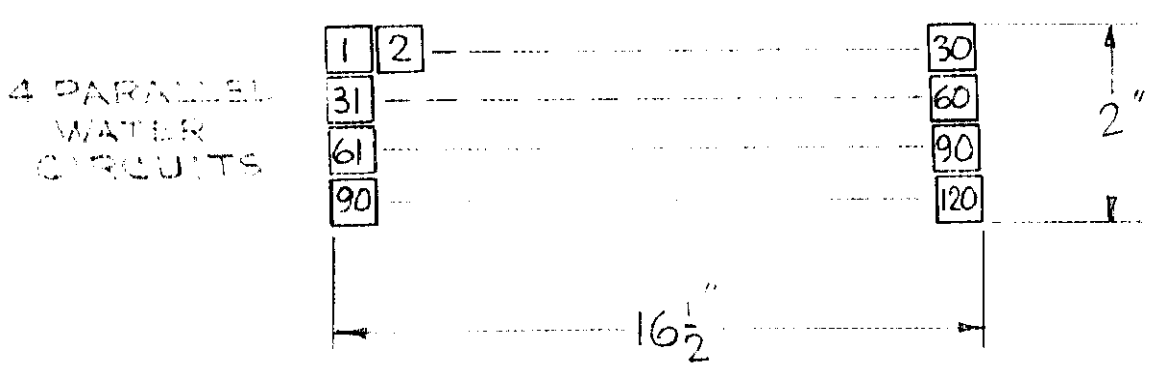

3.3 S3, S4 Coil Design (two identical coils)

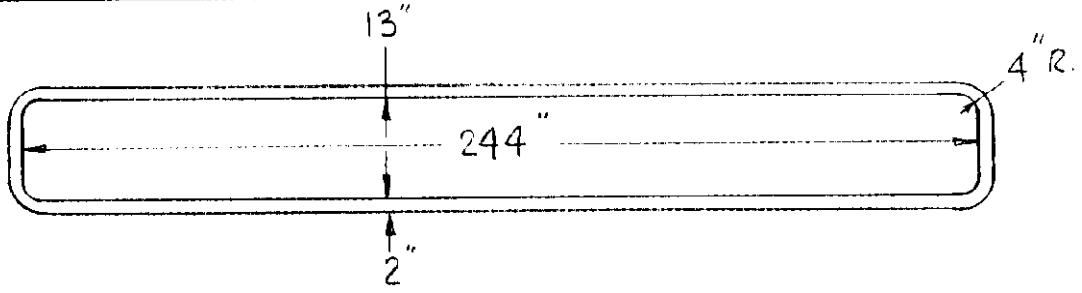


Turns - 40 Original
- 20 Final

| | 20 Turn Modif. | 40 Turn Orignal |
|---|---|---|
| Average turn length | 522 inch | 522 |
| Cu length | 1740 ft | 1740 |
| Cu weight | 1027 lbs | 1027 |
| $R_{60}$ | $27.5 \times 10^{-3}\ \Omega$ | $110 \times 10^{-3}$ |
| $V_{60,350}$ | 9.6 V | 38.6 |
| $KW_{60,350}$ | 3.5 KW | 13.5 |
| Req'd flow for $\Delta T = 38^{o}C$ | 0.4 GPM | 1.4 |
| $\Delta P$ | 100 PSI | 100 |
| Est. flow (4 par. circuits at 100 psi) | 3.2 GPM | 3.2 |
| Coil temperature rise $\Delta T$ | $4^{o}C$ | $16^{o}$ |
| Insulation rating | $120^{o}C$ | $120^{o}$ |

Choose:

Coil Cross Section

COIL CROSSECTION

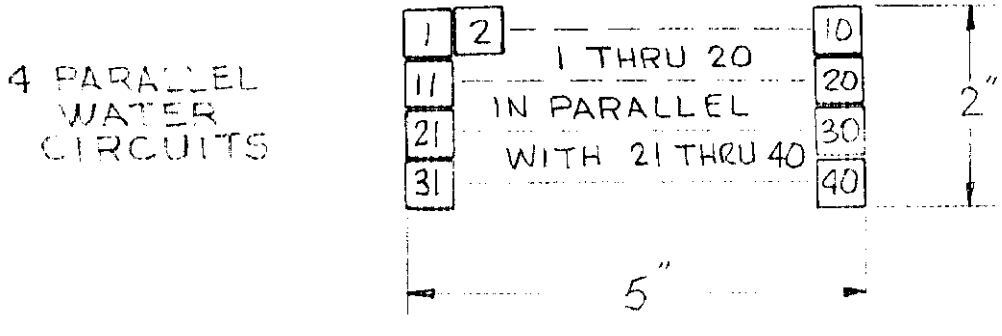

## 3.4 S5 Coil Design

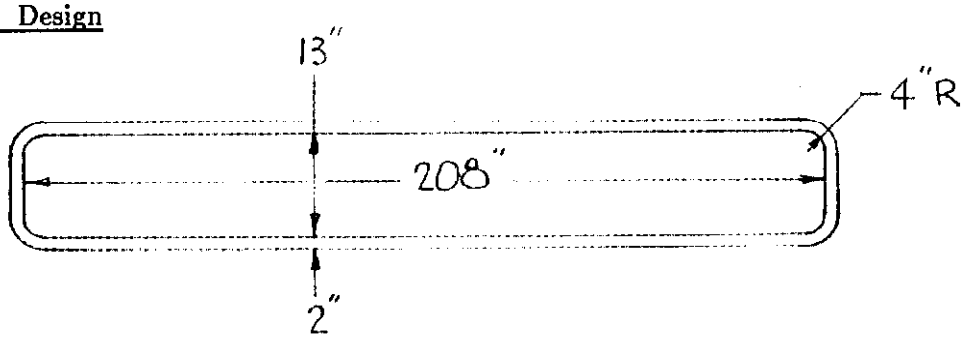


Turns - 40 original
- 20 final

| | 20 Turn Modif. | 40 Turn Original |
|---|---|---|
| Average turn length | 450 inch | 450 |
| Cu length | 1500 ft | 1500 |
| Cu weight | 885 lbs | 885 |
| $R_{60}$ | $23.8 \times 10^{-3}\ \Omega$ | $95.1 \times 10^{-3}$ |
| $V_{60,350}$ | 8.3 Volt | 33.3 |
| $KW_{60,350}$ | 2.9 KW | 11.6 |
| Req'd flow for $\Delta T = 38^{o}C$ | 0.3 GPM | 1.2 |
| $\Delta P$ | 100 PSI | 100 |
| Est. flow (4 par. circuits at 100 psi) | 3.2 GPM | 3.2 |
| Coil temperature rise | $3.4^{o}C$ | $14^{o}$ |
| Insulation rating | $120^{o}C$ | $120^{o}$ |

Choose:

Coil Cross Section

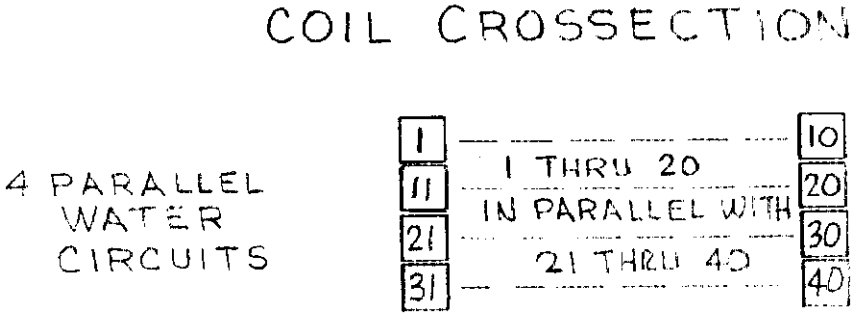

3.5 Coil Summary

| Spoiler | Turns N | Cu Ft | Cu Lbs | 100 PSI Calculated Flow GPM | 100 PSI Measured Flow GPM | 20°C Calculated Resistance x $10^{-3}$ Ω | ~20°C Measured Resistance x $10^{-3}$ Ω |
|---|---|---|---|---|---|---|---|
| S1 | 66 | 2585 | 1525 | 2.7 | 2.4 | 35.2 | 32.4 |
| S2 | 120 | 3940 | 2325 | 2.0 | 2.2 | 215.1 | 204.0 |
| S3 | 20 | 1740 | 1027 | 3.2 | 3.1 | 23.8 | 22.4 |
| S4 | 20 | 1740 | 1027 | 3.2 | 3.3 | 23.8 | 22.7 |
| S5 | 20 | 1500 | 885 | 3.2 | 3.6 | 20.5 | 19.6 |
| TOTAL | -- | 11505 | 6789 | 14.3 | 14.6 | 318.4 | 301.1 |

| Spoiler | I* Amp | V Volt 60°C | Loss KW 60°C | 100 Psi Temperature Rise °C | With 40°C at Inlet Max. Coil Temperature °C | Insulation Rating °C | Overtemp Protection Trip °C |
|---|---|---|---|---|---|---|---|
| S1 | 350 | 14.4 | 5 | 7 | 47 | 120 | 80 |
| S2 | 350 | 87.4 | 30.6 | 58 | 98 | 120 | 90* |
| S3 | 350 | 9.6 | 3.4 | 4 | 44 | 120 | 80 |
| S4 | 350 | 9.6 | 3.4 | 4 | 44 | 120 | 80 |
| S5 | 350 | 8.3 | 2.9 | 3.4 | 43.4 | 120 | 80 |
| TOTAL | 350 | 130 | 45.3 | -- | -- | 120 | |

* Final operating current is 250 A.

The flows in the above tables have been calculated from flow tables. The coil temperature rise has been calculated from:

$$\Delta T = \frac{KW \times 3.8}{GPM} \ ^{o}C$$

Coil S2 runs the hottest with a maximum temperature of 98°C at 350 ADC. However, operating currents in excess of 250 A give more than about 100 Gauss stray field in the beam pipe. This stray field should be limited to about 100 Gauss. An excitation current of 250 A yields on average the required 17 KG field in the spoiler steel. The maximum operating temperature for S2 at 250 ADC is 66°C. Coil S2 might require a small booster pump for higher current operation.

3.6 Electrical Hookup, as Build

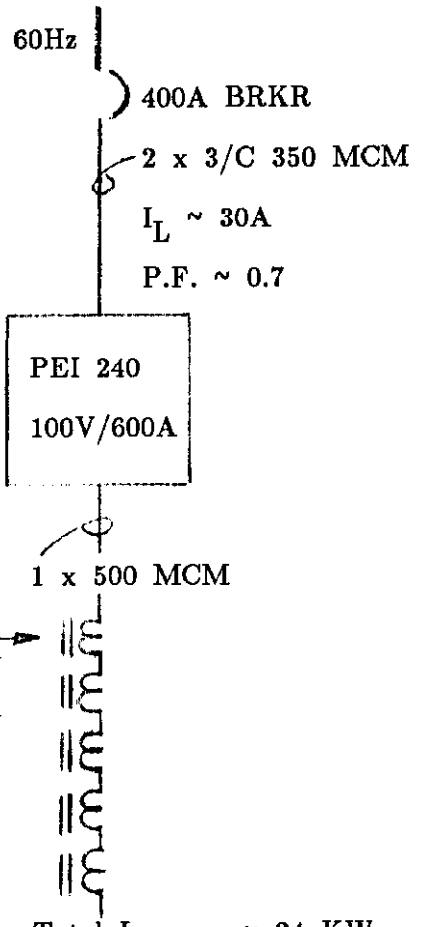


| Center Beam Hole Stray Field Gauss | Average Field KGauss | | |
|---|---|---|---|
| 120 | ~ 18 | 10.3V | S1 |
| 5 | ~ 15.5 | 62.4V | S2 |
| 70 | ~ 18.2 | 6.9V | S3 |
| 70* | ~ 17.8 | 6.9V | S4 |
| 40 | ~ 17.2 | 5.9V | S5 |

Total Losses - ~ 24 KW
Total Flow
At ΔP = 100 PSI ~ 14 GPM
250 ADC
93V (at 60°C
coil temperature)

*Estimate same as S3.

## 4. MEASUREMENT OF THE AVERAGE FIELD STRENGTH IN THE STEEL

After the spoilers have been built the field in the steel must be measured. It is only practical to measure the average field in a chosen cross section of the steel as a function of excitation current. The areas above and below the beam pipe are chosen to be measured, since they are of the most interest.

The only way we can measure the field strength in a solid piece of excited steel, is to vary the excitation current and to integrate the resulting change in flux at a sense winding installed around the excited steel. It is a tedious method, which is described in detail in Ref. 1. The principle is briefly described hereafter.

Assume we have a steel toroid with cross section A, in which we want to measure the field as a function of the excitation current I. A one turn sense winding is installed around A.

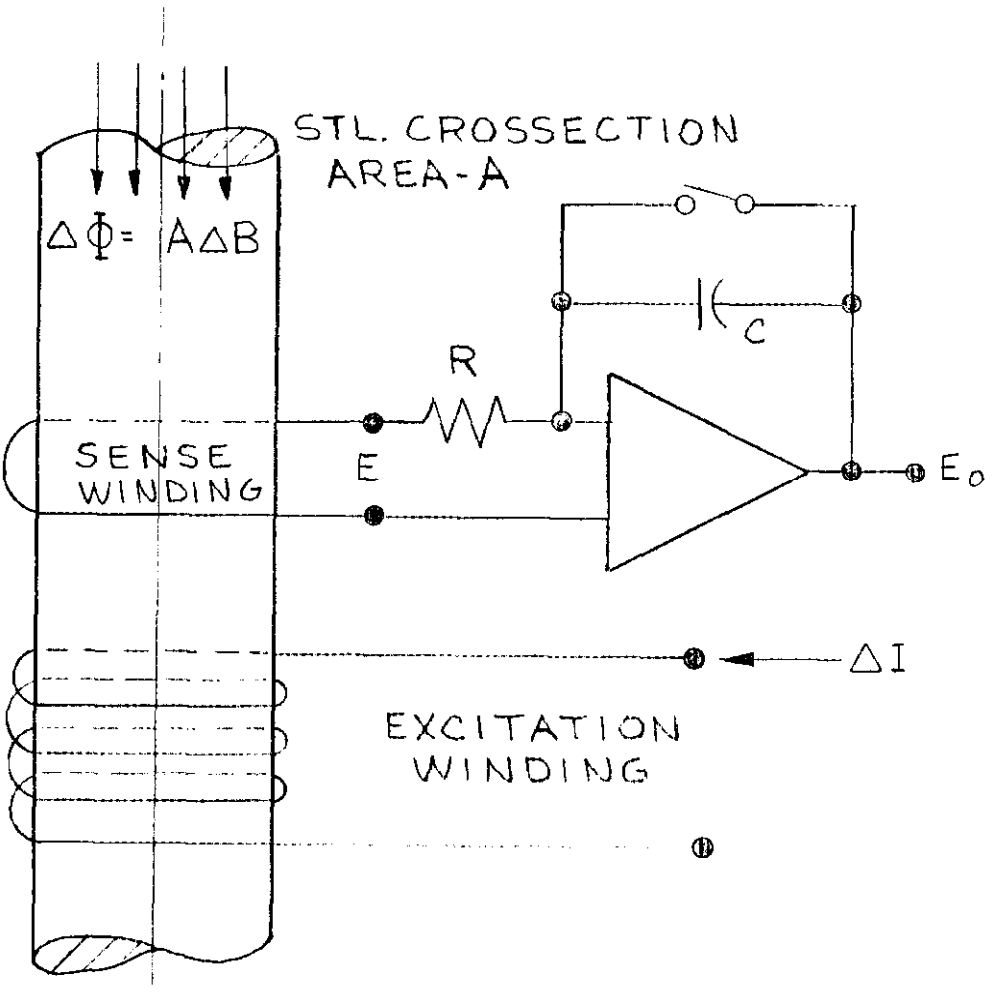


An excitation current change $\Delta I$ will cause a flux change $\Delta\phi$, which induces a voltage E at the sense winding. The time integral of E is collected at capacitor C and appears as $E_o$.

For the one turn sense winding we can write:

$$E = -\frac{d\phi}{dt} \text{ (resulting from current step } \Delta I)$$

$$\int_o^T E\,dt = -A \int_o^T dB$$

for the integrator we can write:

$$E_o = -\frac{1}{RC} \int_o^T E\,dt$$

$$E_o = \frac{A}{RC} \int_o^T dB$$

$$\int_o^T dB = \Delta B$$

$$\Delta B = \frac{RC}{A} Eo$$

We can calculate each $\Delta B$ by multiplying the integrator output voltage $E_o$ with constant RC/A, for each current change step $\Delta I$. Keeping track of the cumulative values of $\Delta I$ and $\Delta B$, and knowing that the BH curve is symmetrical around zero, allows the plotting of the B versus I curve for the steel. The measurement is started by reversing the excitation current several times between positive and negative operating current values, which yields $B_r$ and $B_{max}$. The positive operating current is reduced in steps $\Delta I$ (yields $\Delta B$) to zero, reversed to minus operating current and brought to zero again, reversed and stepped up to the positive operating current, while recording $\Delta I$ and $E_o$ for each step.

The value of the transfer constant RC/A should be known accurately.

$$\Delta B = \frac{RC}{A} E_o \quad Wb/m^2$$

is correct for:

R in Ohms
C in Farads
A in $m^2$
$E_o$ in Volts

or:

$$\Delta B = 15.5 \frac{RC}{A} E_o \text{ Gauss}$$

is correct for:

R in Ohms
C in $\mu$Farad
A in $in^2$
$E_o$ in Volts.

The BH curves for spoilers S1 through S5 shown in Fig. 5 through 9 have been plotted from these measurements. The remnant field in the spoilers varies from 1 to 6 KG. Lower remnant fields are indicative of larger air gaps or different steel properties (Ref. 1). The curves only give the average field over the measured area and indicate that 250A excitation yields about 17 KG and operates the steel in the saturated region. Increasing the current above 250A does not increase the field in the steel much, but produces unacceptable (except for S2) stray field values in the beam pipe.

## 5. BEAM HOLE STRAY FIELD AND MAGNETIC SHIELDING

### 5.1 Stray Field in the Beam Hole

The spoiler magnets have a 3-1/2" round or square hole through the magnetized steel for the beam pipe. Ideally there should be no stray fields in the hole, but that is not the case, because the same number of AmpereTurns required to push the magnetic flux through the steel above and below the beam hole are also pushing flux (stray field) through the hole. When the steel around the beam hole becomes saturated, it requires many ampere turns and the stray field will increase much more rapidly than the field in the steel. Thus, high excitation in the steel can create unacceptably high stray fields. Stray fields in the order of 100 gauss are the upper acceptable limits, until operating results prove otherwise.

Now comes the question, "How much stray field can we expect and what can we do about it?" For the same steel it is obvious that a round hole has less stray field than a square hole with one side perpendicular to the field direction. A square hole with the field traveling in the direction of the diagonal would be better than the same hole in a different orientation. For economical reasons spoilers S1 and S2 have 3-1/2" diameter round holes and S3, S4 and S5 have 3-1/2" square holes, with one side perpendicular to the flux. This hole is made by milling a deep slot into the steel and then filling the top of the slot with a filler block, leaving a 3-1/2" square opening in the center of the steel. There are some small gaps associated with this, which require additional AmpereTurns, increasing the stray field even more, compared to solid steel around the hole.

To drive 17 KGauss (see para. 3) through:

| | |
|---|---|
| 3-1/2" steel requires | 500 AT |
| 0.01" air requires | 350 AT |
| TOTAL | 850 AT |

These same ampere turns appear across the beam hole.

1000 AT across the 3-1/2" beam hole create about 140 Gauss stray field, as calculated below.

$$B = \mu H$$

$$B = 4\pi \times 10^{-7} \times \frac{1000}{3.5 \times 2.54 \times 10^{-2}} \times 10^{4} \text{ Gauss}$$

$$B \sim 140 \text{ Gauss.}$$

Increasing the steel induction to 20 KGauss requires about 5 times as many AmpereTurns, which increases the stray field to an estimated value of 700 Gauss. These are all some pretty rough estimates, but it is reasonable to expect, at 17 KG steel field, stray fields in the order of 100 Gauss, which increase rapidly at higher induction. This estimate proved to be on the low side.

The stray field in the beam hole has been measured (at the center of the hole) and is plotted along with the spoiler excitation curves shown in Figs. 5 through 9. The plots show (curve #3) stray fields in the order of 200 Gauss, except S5 is in the order of 100 Gauss, for about 17 KG steel excitation. However, all spoiler magnets are operated in series and to make each one run at 17 KGauss or better, requires 250A excitation. S2 does not make it, but runs at about 15.5 KGauss. S2 appears to have larger air gaps. This operating current gives a reasonable compromise between steel excitation and stray field, when a magnetic shield is used.

## 5.2 Magnetic Shield for the Beam Hole

Operation of the spoilers at 250A produces stray fields substantially beyond 100 Gauss. A cylindrical shield made from transformer steel, which can support high fields can be inserted in the beam pipe as a magnetic shield. This material is relatively inexpensive and easily rolled to the required diameters.

The thickness of the shield can be estimated by saying, that all the flux from the 3-1/2" hole side has to travel through the shield wall and not make anymore than 15 KG in the shield wall. Suppose a uniform (1000 Gauss) field emits from the 3-1/2" side and is all collected in the round shield wall with thickness t, at 15 KG. Then we can write:

$$3.5 \times 1000 = 2t \times 15000$$

$$t = 0.117"$$

This is a very simplistic approach, because as soon as the shield is inserted in the hole more flux will try to cross it by traveling through the shield wall and thus saturating it prematurely. This will make the shield ineffective. The further the shield is away from the hole walls, the better it works, but now it interferes with the beam aperture. It is clear that the shield should be inside the stainless steel beam pipe, preferably with some spacer. Figure 10 shows the results of various tests with different stray field shields at spoiler S3. The final shields were made from 10 layers, 12 mills thick oriented silicon steel, ARMCO M5. They are made in 6 inch lengths, degreased and not annealed at a cost of $7.15 each. Twelve layers of 12 mill silectron steel seem to work some what better.

All spoiler magnets have been equipped with 10 layers, 10 mill M5 as shown in Fig. 11. All stray fields at 250A are now about 100 Gauss or lower, compared to stray fields in the order of 1000 Gauss without shields. It should be understood that the stray fields have only been measured at one center point and might vary along the beam axis or away from the center.

This seems to be the best we can do without interfering with the beam aperture.

## ACKNOWLEDGEMENTS

Toni Passi made all the mechanical work happen with the help of Don Carpenter. Our magnet factory made the coils. Walt Jaskierny and Julius Lenz made integrators and helped with the tests along with other technicians. Their help is much appreciated and was necessary to complete this job.

## REFERENCES

TM978 - 6013.000 "A short approach to the electrical design of a muon spoiler", A.T. Visser, July 1980.

| REV. | DESCRIPTION | DRAWN | DATE |
|---|---|---|---|
| | | APPD. | DATE |

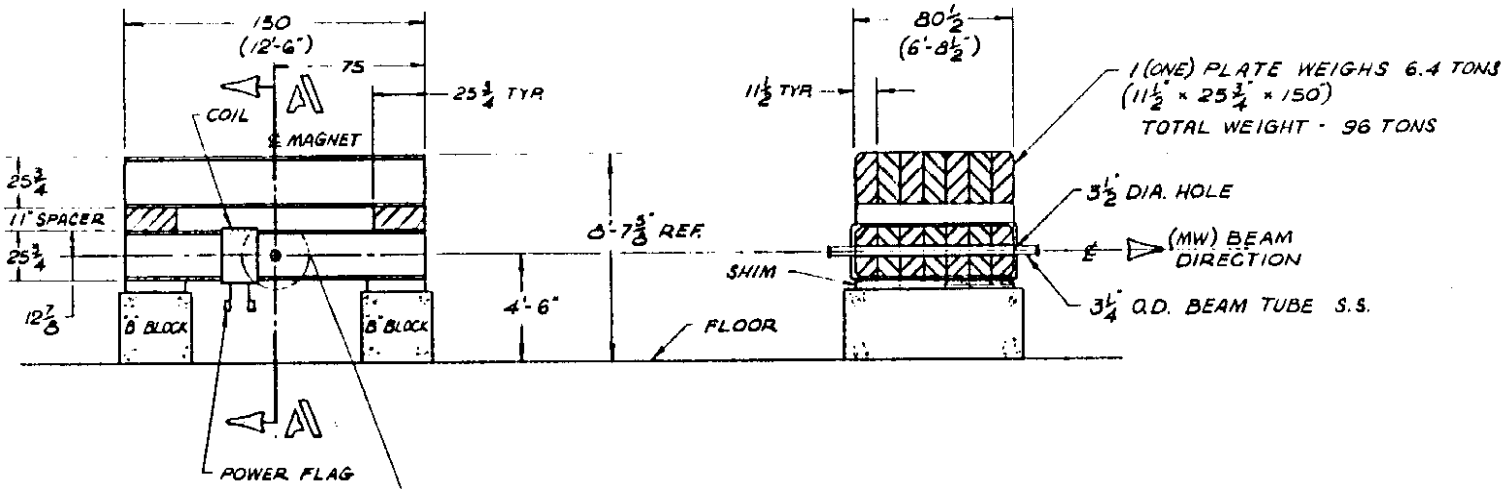


LOOKING DOWNSTREAM

SECTION A-A

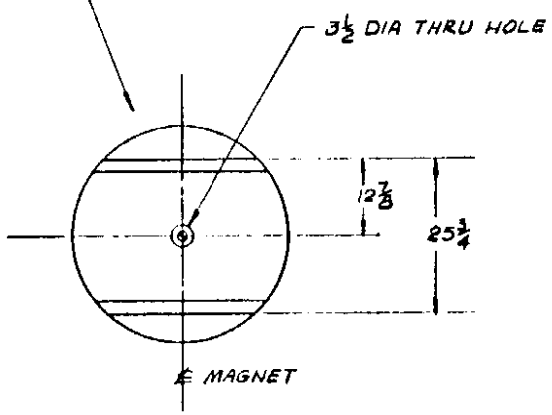


ENLARGED VIEW
BEAM TUBE & COIL REMOVED
SCALE: ¾" = 1'-0"

FIG. 1

| ITEM NO. | PART NO. | DESCRIPTION OR SIZE | QTY. REQ. |
|---|---|---|---|
| | | PARTS LIST | |

| UNLESS OTHERWISE SPECIFIED | | | ORIGINATOR | A. PASSI | 12-1-86 |
|---|---|---|---|---|---|
| FRACTIONS | DECIMALS | ANGLES | DRAWN | R. WILLIAMS | 12-1-86 |
| ± | ± | ± | CHECKED | | |
| 1. BREAK ALL SHARP EDGES 1/64 MAX. | | | APPROVED | | |
| 2. DO NOT SCALE DWG. | | | USED ON | | |
| 3. DIMENSIONING IN ACCORD WITH ANSI Y14.5 STD'S. | | | MATERIAL- | | |
| ✓ MAX. ALL MACHINED SURFACES | | | | | |

FERMI NATIONAL ACCELERATOR LABORATORY
UNITED STATES DEPARTMENT OF ENERGY

S1 TOROID SPOILER MAGNET
E-672/706 MW BEAM LINE
R.D. / MECH. DEPT.

| SCALE | PLUMBO | DRAWING NUMBER | REV. |
|---|---|---|---|
| ¼" = 1'-0" | | 9220.672/706-MC-203739 | |

BRUNING-68-107

| REV. | DESCRIPTION | DRAWN | DATE |
|---|---|---|---|
| | | APPD. | DATE |

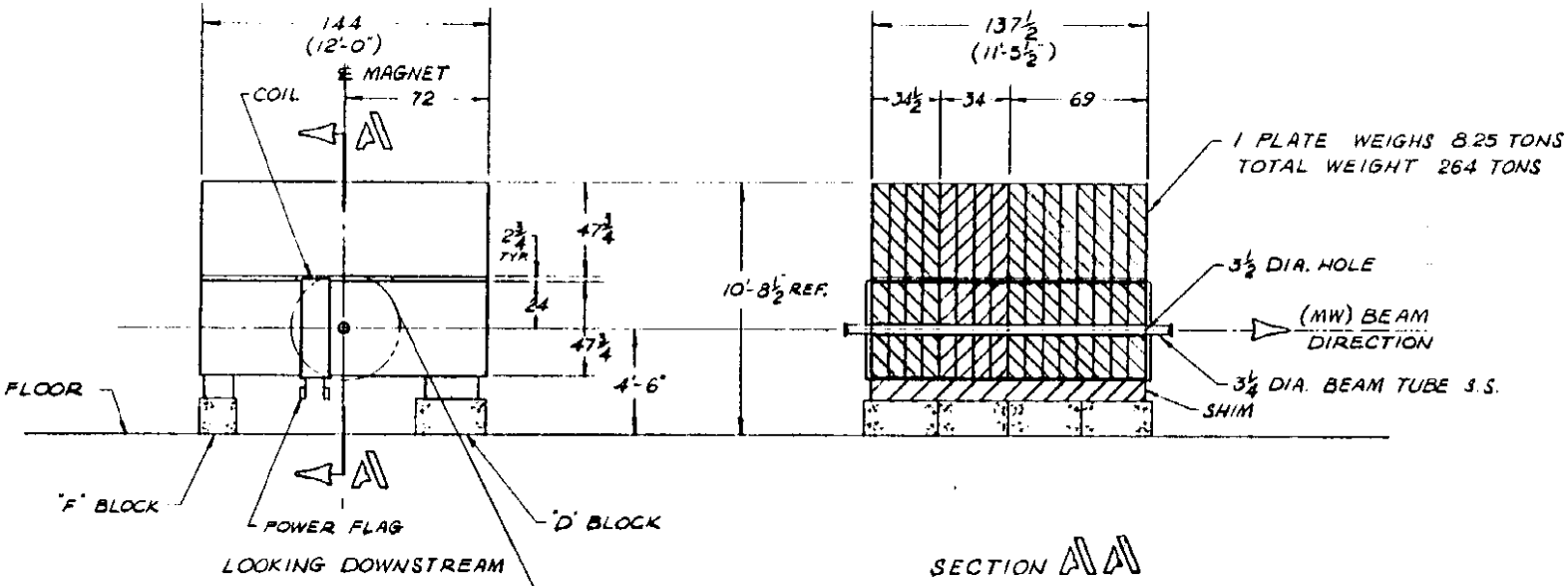


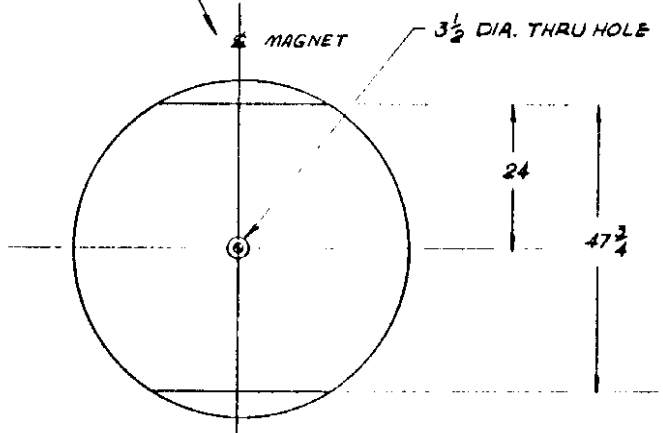


ENLARGED VIEW
BEAM TUBE & COIL REMOVED
SCALE: ¾" = 1'-0"

FIG 2

| ITEM NO. | PART NO. | DESCRIPTION OR SIZE | QTY. REQ. |
|---|---|---|---|
| PARTS LIST | | | |

| UNLESS OTHERWISE SPECIFIED | | | | | |
|---|---|---|---|---|---|
| FRACTIONS | DECIMALS | ANGLES | ORIGINATOR | A. PASSI | 12-1-86 |
| ± | ± | ± | DRAWN | R. WILLIAMS | 12-1-86 |
| | | | CHECKED | | |
| 1. BREAK ALL SHARP EDGES 1/64 MAX. | | | APPROVED | | |
| 2. DO NOT SCALE DWG. | | | USED ON | | |
| 3. DIMENSIONING IN ACCORD WITH ANSI Y14.5 STD's. | | | | | |
| √ MAX. ALL MACHINED SURFACES | | | MATERIAL- | | |

**FERMI NATIONAL ACCELERATOR LABORATORY**
UNITED STATES DEPARTMENT OF ENERGY

S2 TOROID (SPOILER) MAGNET
E-672/706 MW BEAM LINE
R.D. / MECH. DEPT.

| SCALE | FILMED | DRAWING NUMBER | REV. |
|---|---|---|---|
| ¼" = 1'-0" | | 9220.672/706-MC-203740 | |

| REV. | DESCRIPTION | DRAWN | DATE |
|---|---|---|---|
| | | APPD. | DATE |

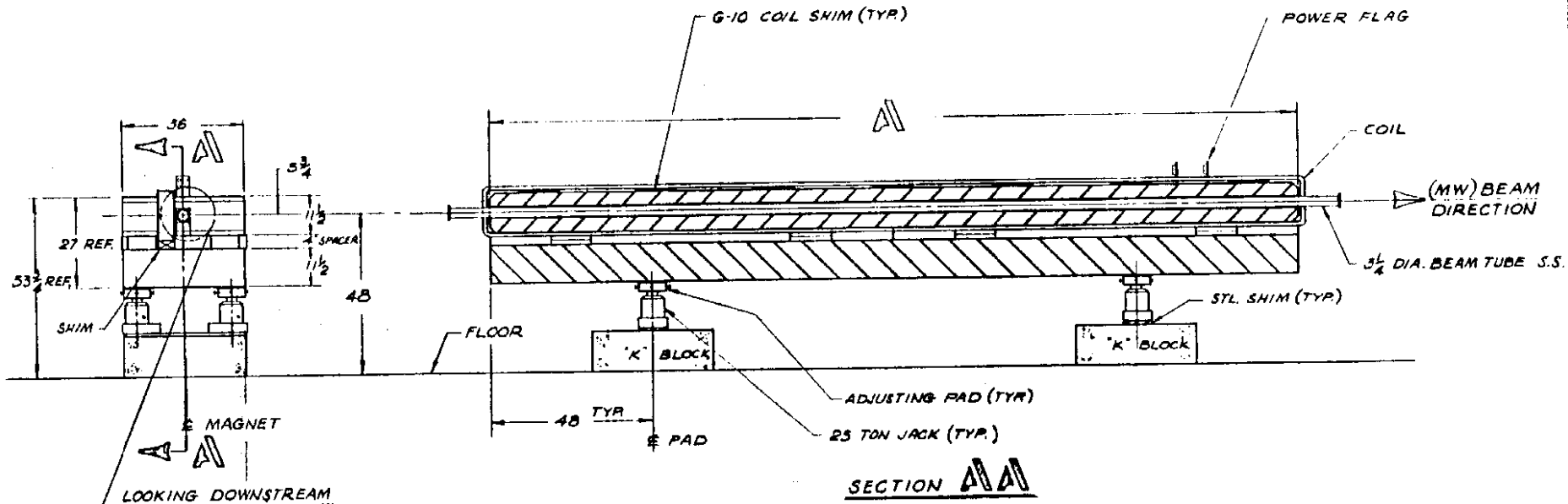


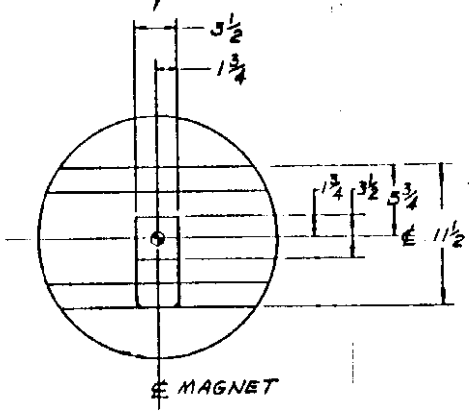


ENLARGED VIEW
BEAM TUBE & COIL REMOVED
SCALE: 1½" = 1'-0"

| MAGNET DESCRIPTION | A |
|---|---|
| S3 . 32 TON | 240 (20'-0") |
| S4 32 TON | 240 (20'-0") |
| S5 27 TON | 204 (17'-0") |

FIG 3

| ITEM NO. | PART NO. | DESCRIPTION OR SIZE | QTY. REQ. |
|---|---|---|---|
| PARTS LIST | | | |

| UNLESS OTHERWISE SPECIFIED | | | ORIGINATOR | A. PASSI | 12-2-86 |
|---|---|---|---|---|---|
| FRACTIONS | DECIMALS | ANGLES | DRAWN | R. WILLIAMS | 12-2-86 |
| ± | ± | ± | CHECKED | | |
| 1. BREAK ALL SHARP EDGES 1/64 MAX. | | | APPROVED | | |
| 2. DO NOT SCALE DWG. | | | USED ON | | |
| 3. DIMENSIONING IN ACCORD WITH ANSI Y14.5 STD'S. | | | MATERIAL- | | |
| √ MAX. ALL MACHINED SURFACES | | | | | |

FERMI NATIONAL ACCELERATOR LABORATORY
UNITED STATES DEPARTMENT OF ENERGY

S3, S4 & S5 TOROID SPOILER MAGNETS
E-672/706 MW BEAM LINE
R.D. / MECH. DEPT.

| SCALE | PLUMBED | DRAWING NUMBER | REV. |
|---|---|---|---|
| ½" = 1'-0" | | 9220.672/706-MC-203741 | |

USS HOT ROLLED LOW CARBON STEEL PLATES
C1030 — OVER .250 INCHES
DC MAGNETIZATION

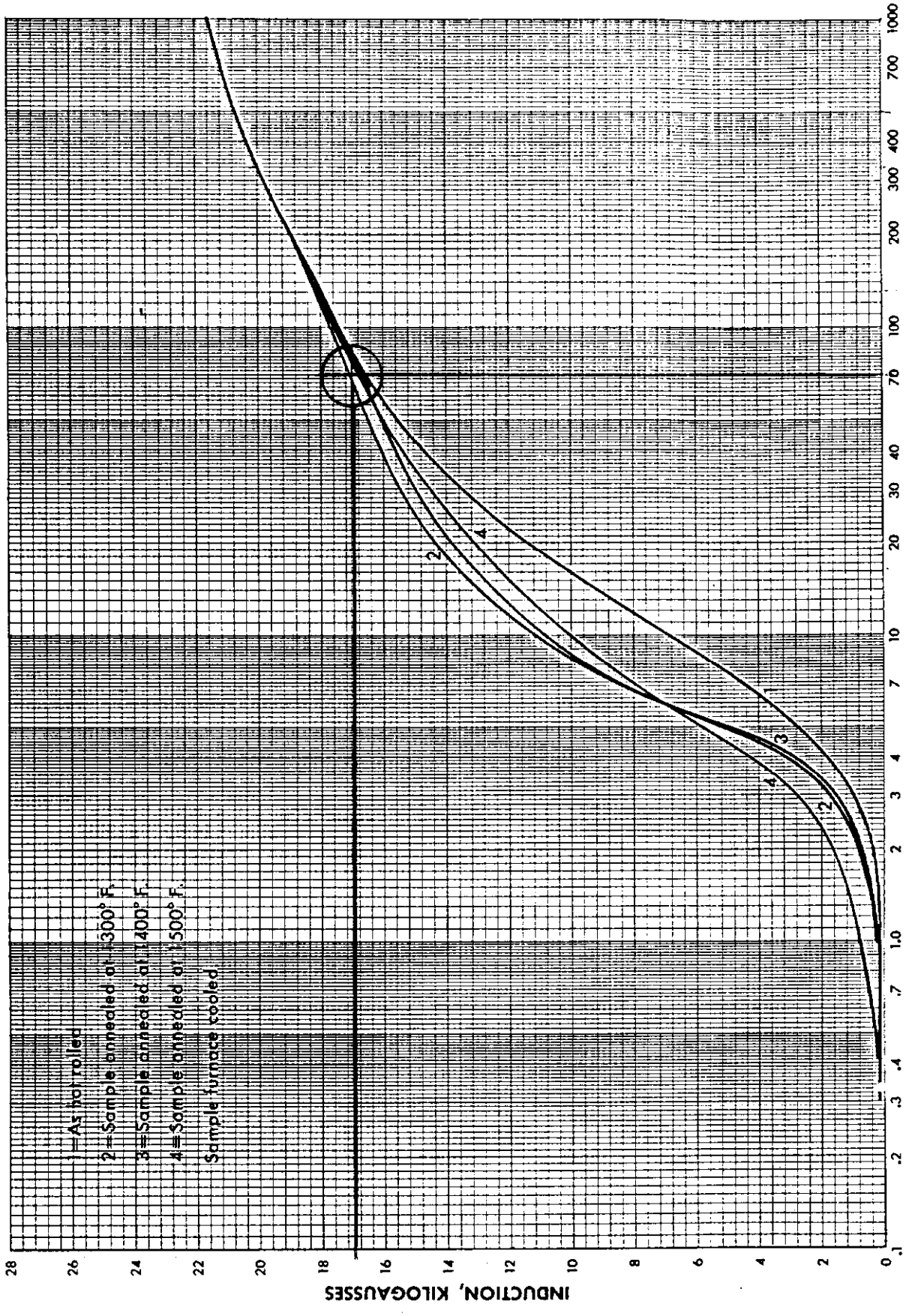


Test Conditions: Lengthwise samples tested in Fahy Permeameter.

FIG. 4

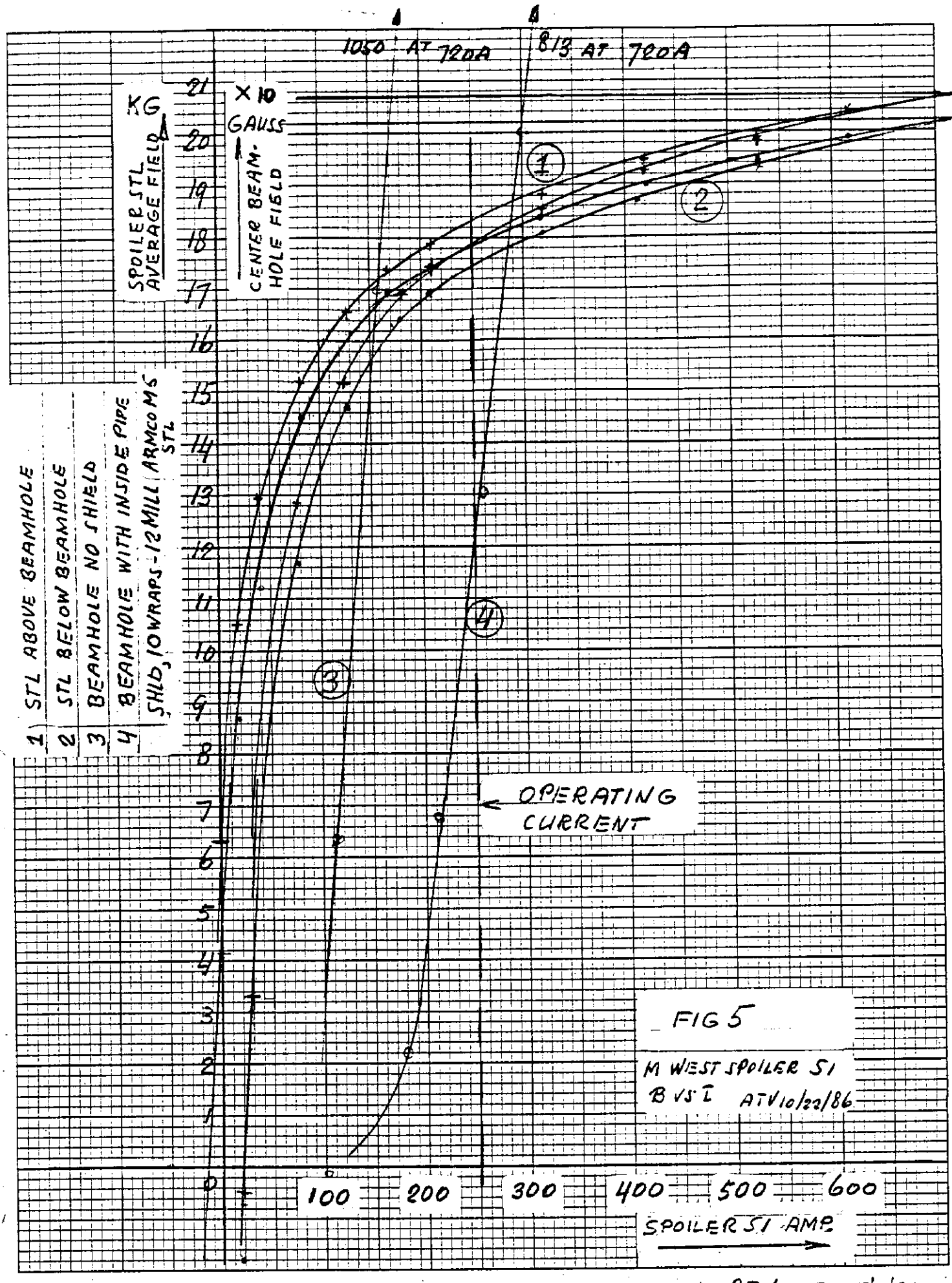


FIG 5

M WEST SPOILER S1
B VS I AT V 10/22/86

A.T. VISSER 5/2/86
FORM

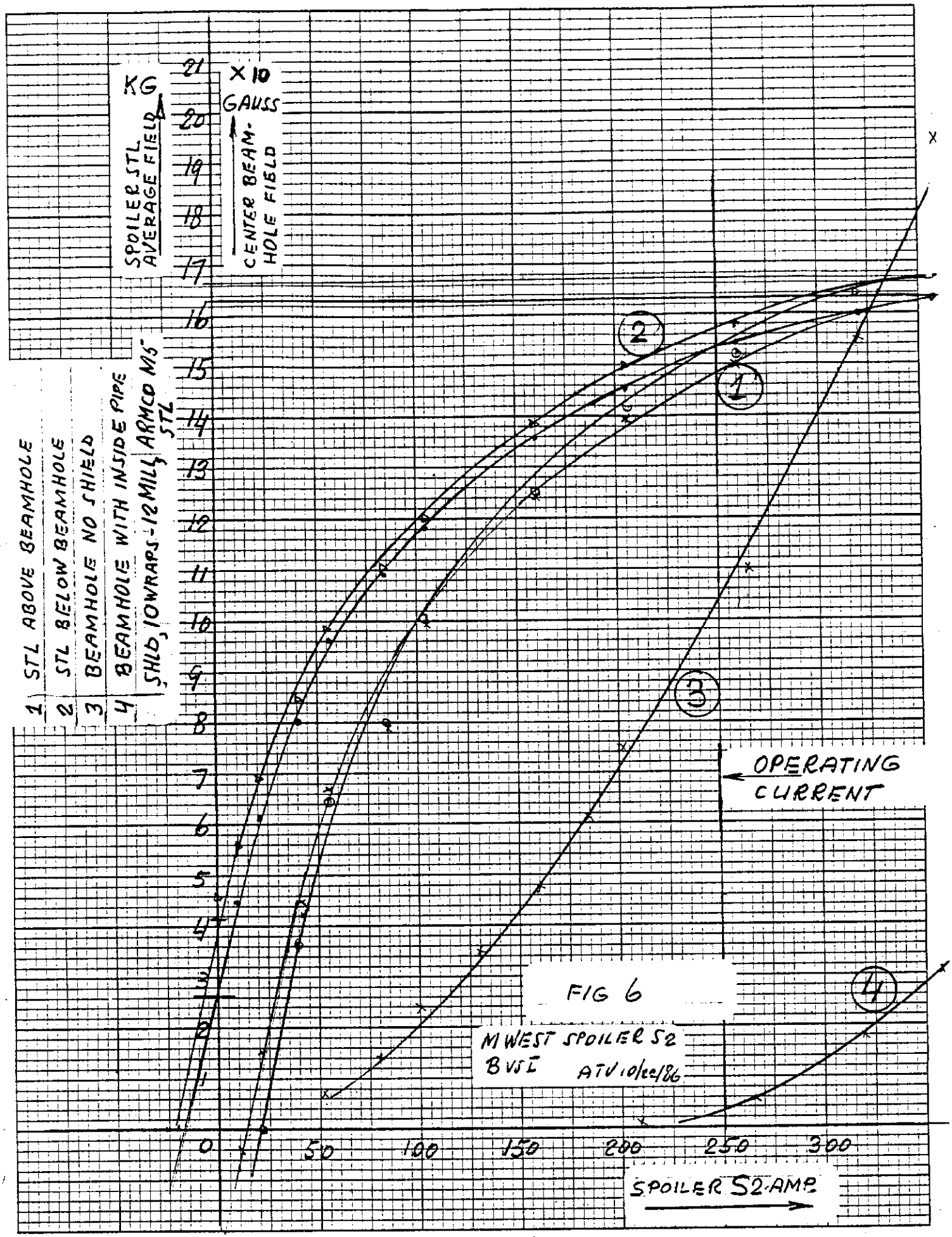


FIG 6

M WEST SPOILER S2
B VS I ATV 10/22/86

MEASURED 10/6/86

A.T. VISSER 5/2/86
FORM

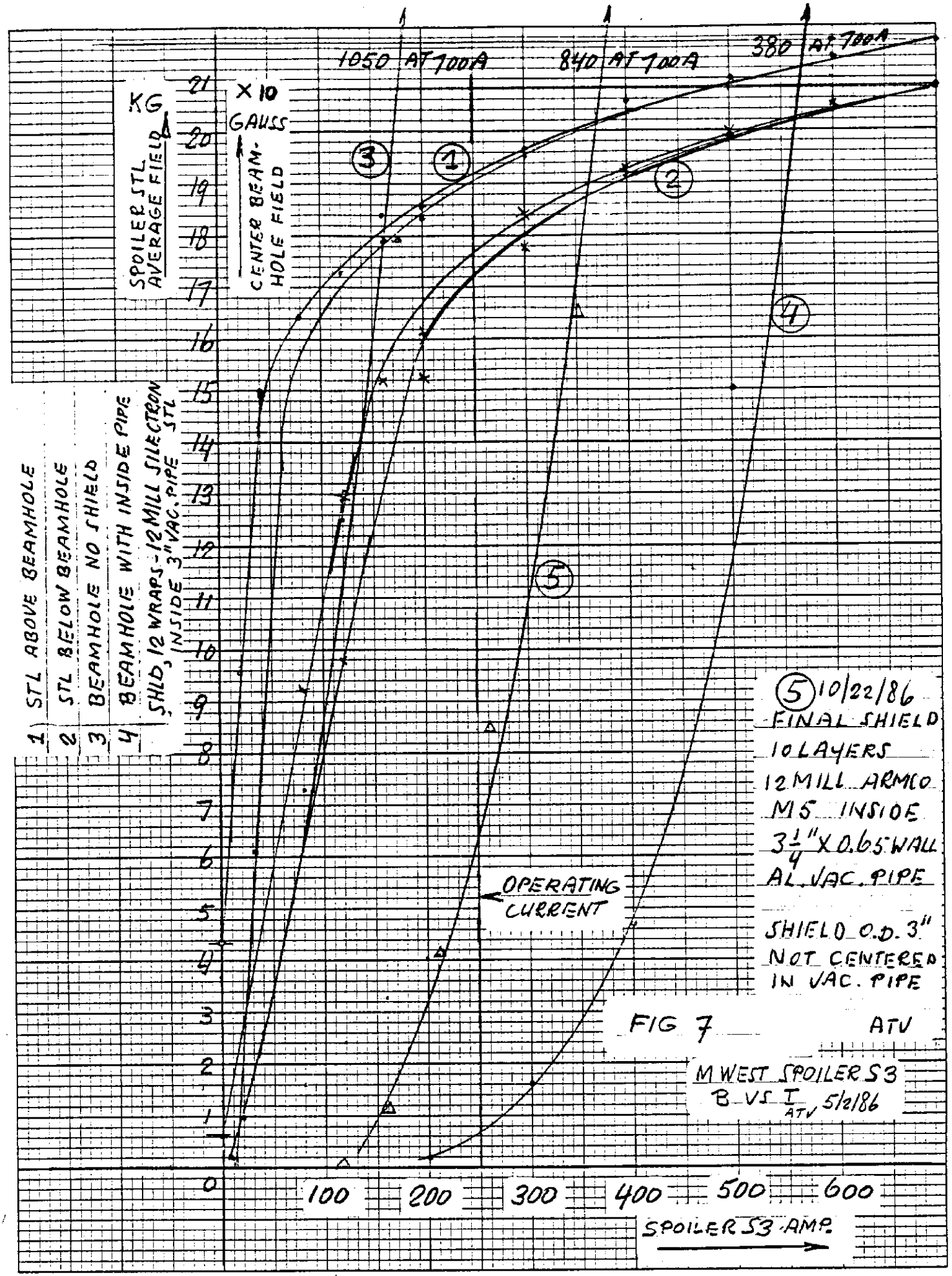
1050 AT 700A
840 AT 700A
380 AT 700A
KG
SPOILER STL AVERAGE FIELD
X 10 GAUSS
CENTER BEAM-HOLE FIELD
1 STL ABOVE BEAMHOLE
2 STL BELOW BEAMHOLE
3 BEAMHOLE NO SHIELD
4 BEAMHOLE WITH INSIDE PIPE
SHLD, 12 WRAPS - 12 MILL SILECTRON STL INSIDE 3" VAC. PIPE
5 10/22/86
FINAL SHIELD
10 LAYERS
12 MILL ARMCO
M5 INSIDE
3 1/4" X 0.65 WALL
AL. VAC. PIPE
SHIELD O.D. 3"
NOT CENTERED
IN VAC. PIPE
OPERATING CURRENT
FIG 7
ATV
M WEST SPOILER S3
B VS I ATV 5/2/86
SPOILER S3 AMP.
A.T. VISSER 5/2/86
FORM

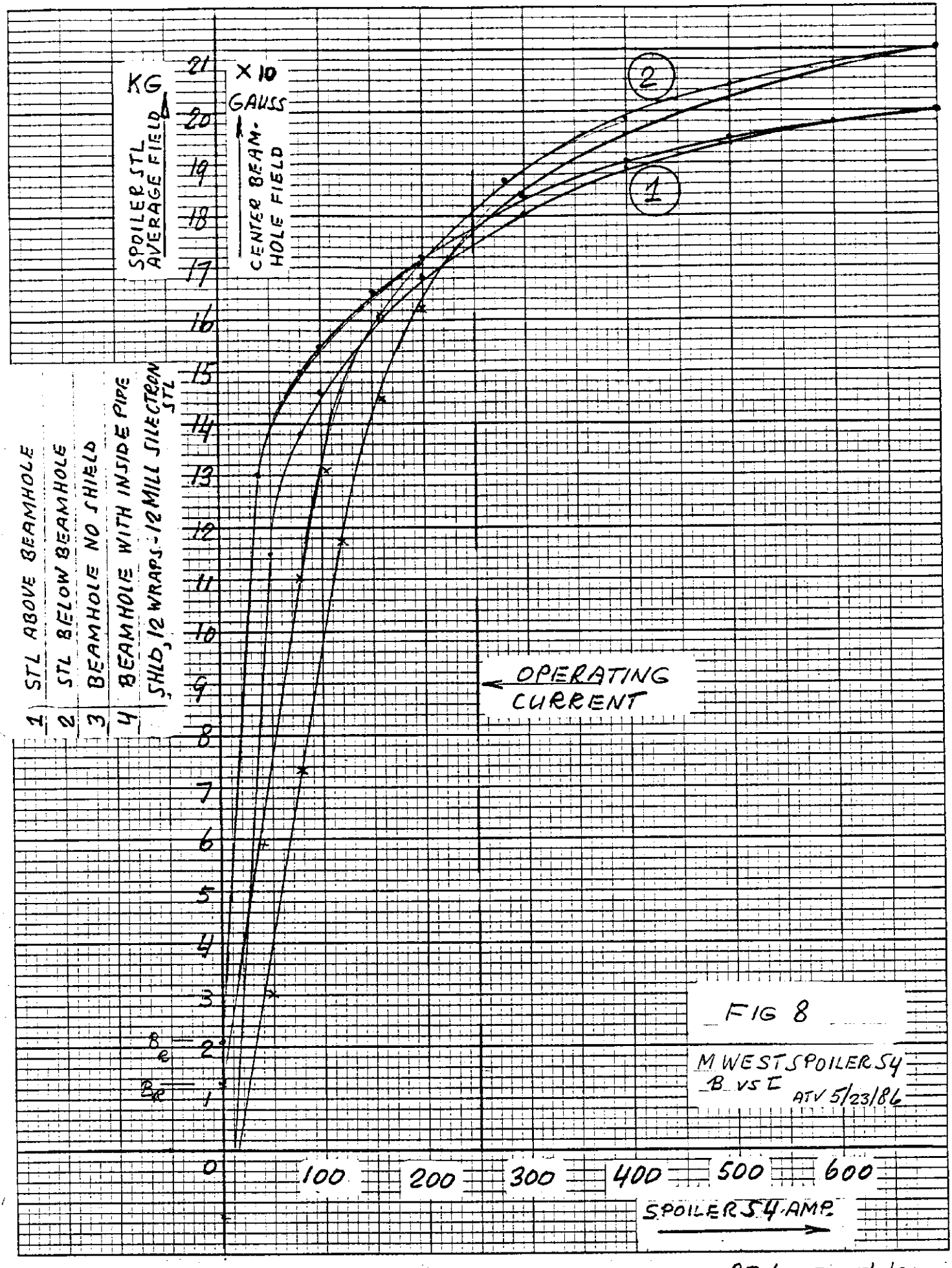


FIG 8

M WEST SPOILER 54
B vs I
ATV 5/23/86

A.T. VISSER 5/2/86
FORM

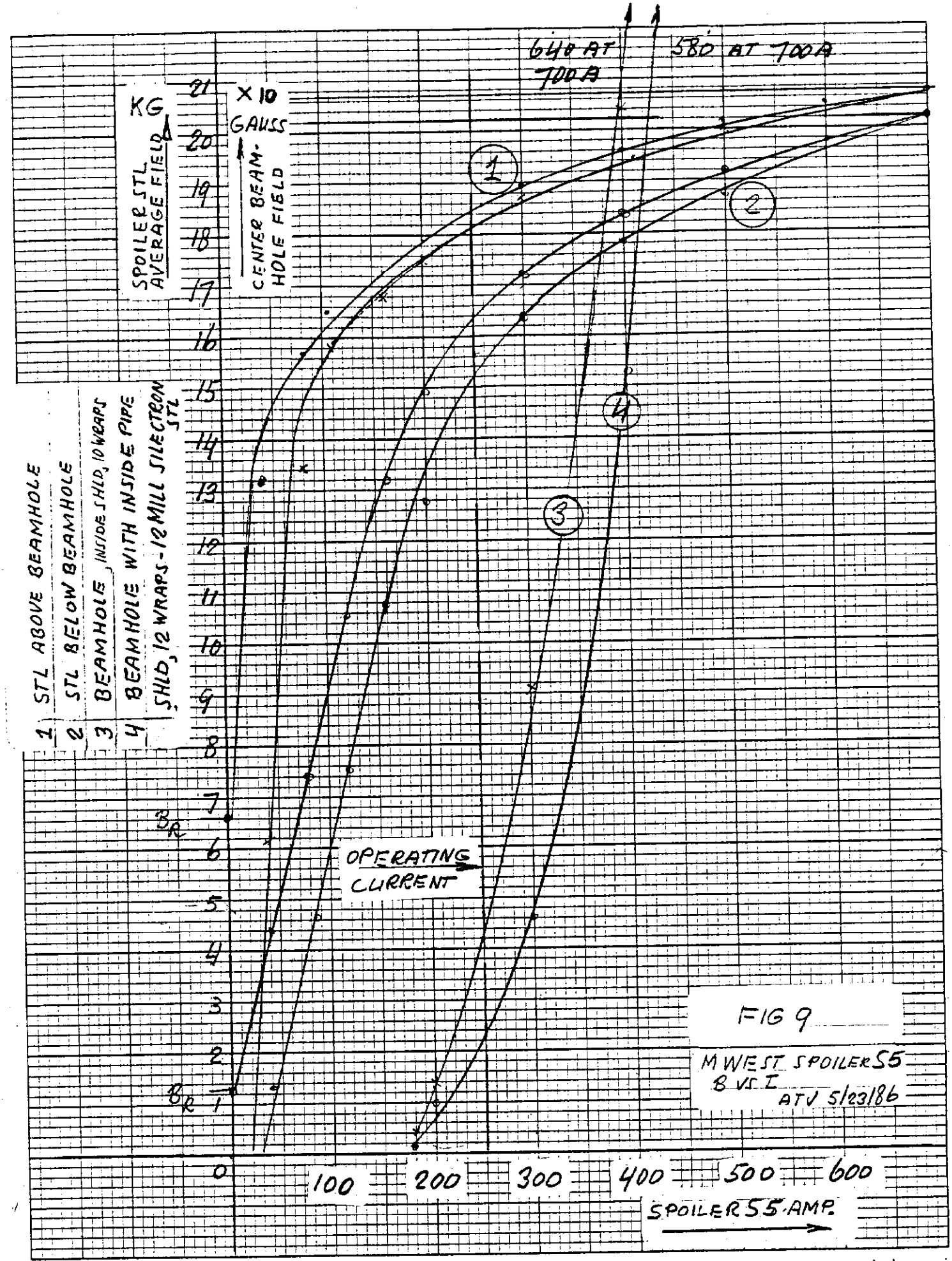


FIG 9

M WEST SPOILER S5
B VS I
ATV 5/23/86

A.T. VISSER 5/2/86
FORM

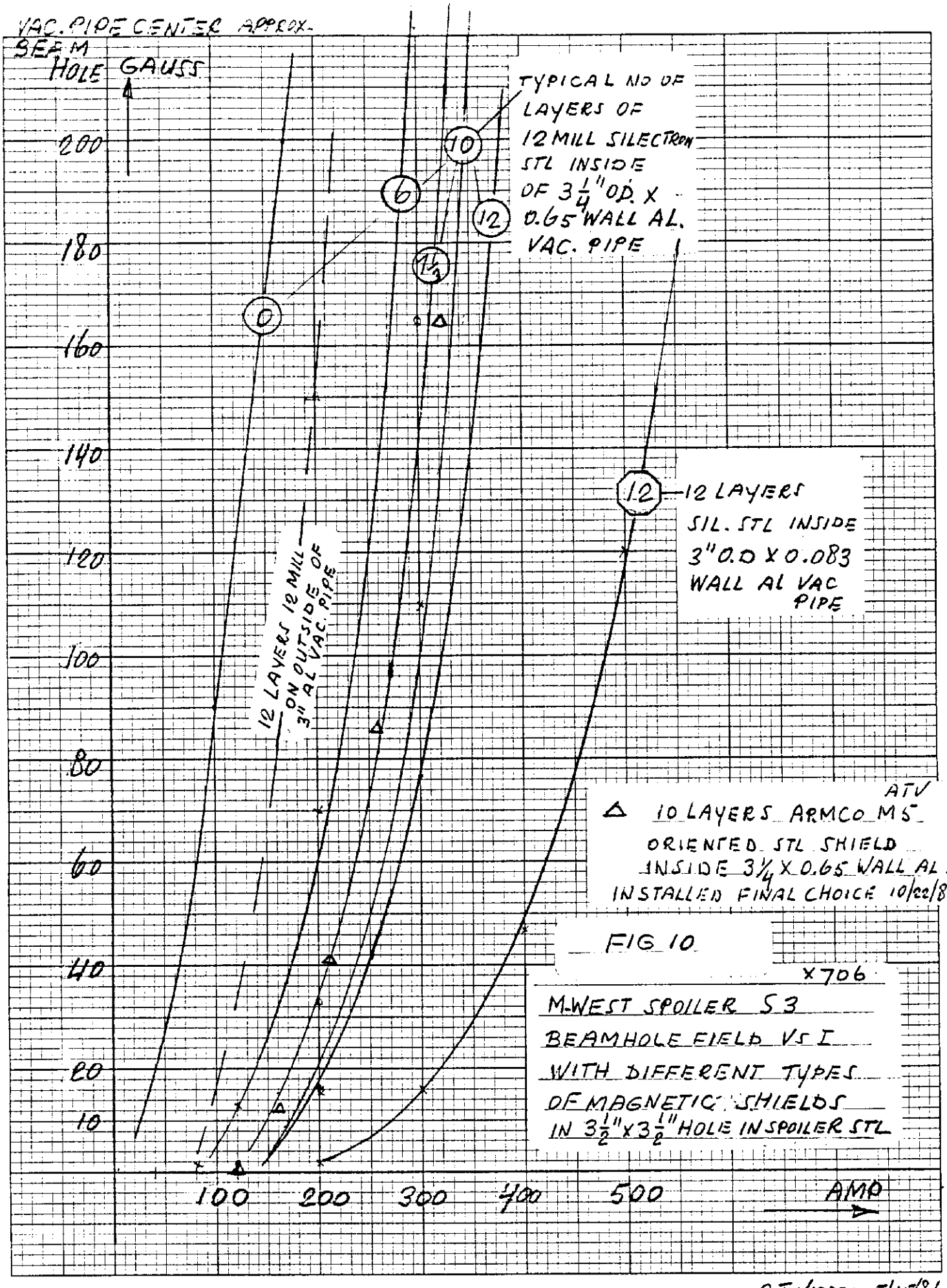


A.T. Vissee 5/15/86

| REV. | DESCRIPTION | DRAWN | DATE |
|---|---|---|---|
| | | APPD. | DATE |

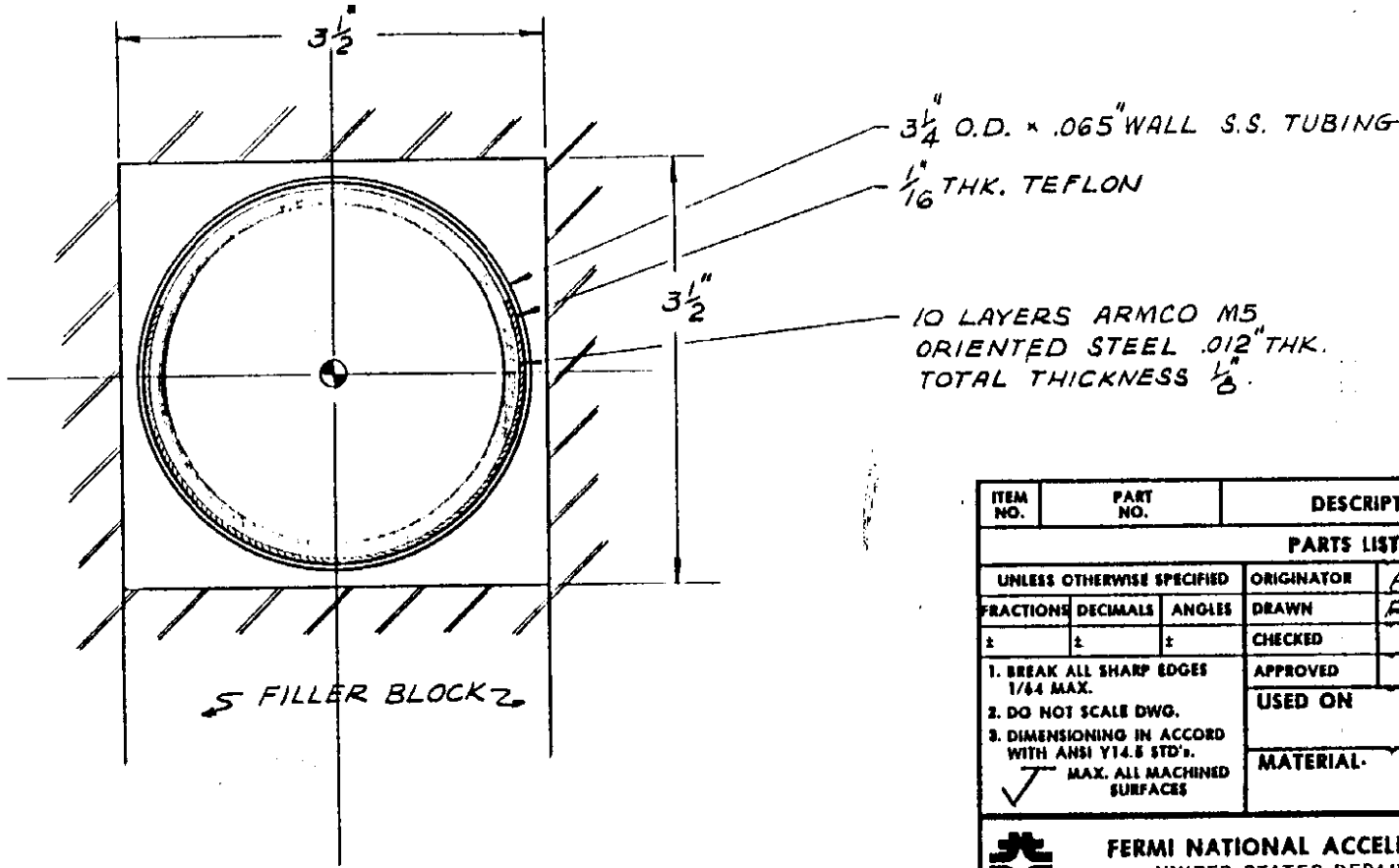


FIG. 11

| ITEM NO. | PART NO. | DESCRIPTION OR SIZE | QTY. REQ. |
|---|---|---|---|

PARTS LIST

| UNLESS OTHERWISE SPECIFIED | | | | | |
|---|---|---|---|---|---|
| FRACTIONS | DECIMALS | ANGLES | ORIGINATOR | A. PASSI | 12-4-86 |
| | | | DRAWN | R. WILLIAMS | 12-4-86 |
| ± | ± | ± | CHECKED | | |
| | | | APPROVED | | |

1. BREAK ALL SHARP EDGES 1/64 MAX.
2. DO NOT SCALE DWG.
3. DIMENSIONING IN ACCORD WITH ANSI Y14.5 STD's.

✓ MAX. ALL MACHINED SURFACES

USED ON

MATERIAL:

**FERMI NATIONAL ACCELERATOR LABORATORY**
UNITED STATES DEPARTMENT OF ENERGY

BEAM TUBE CROSS SECTION
E-672/706 MW SPOILER MAGNETS
R.D. / MECH. DEPT.

| SCALE | FILMED | DRAWING NUMBER | REV. |
|---|---|---|---|
| 1" = 1" | | 9220.672/706-MB-203743 | |

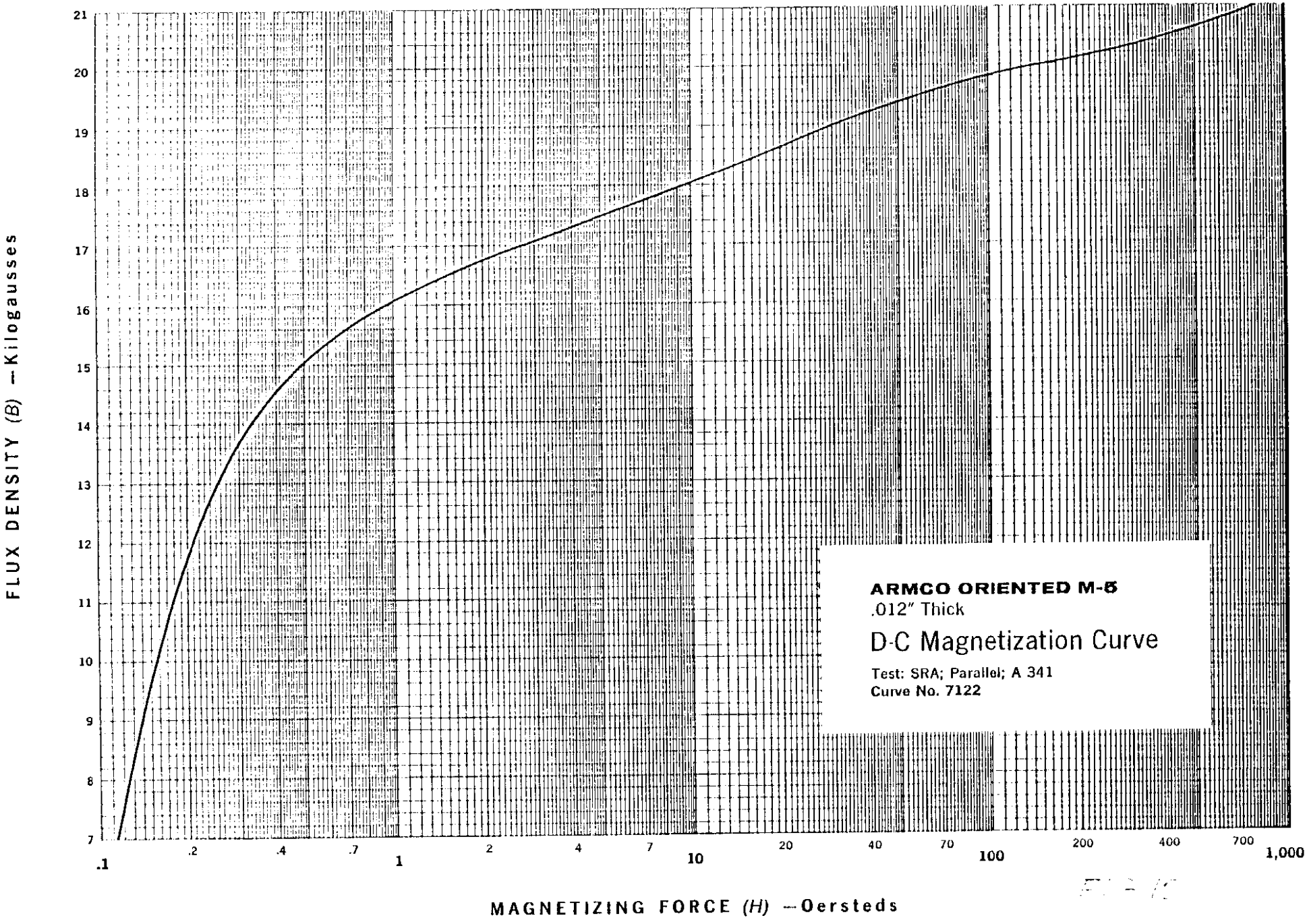
ARMCO ORIENTED M-5
.012" Thick
D-C Magnetization Curve
Test: SRA; Parallel; A 341
Curve No. 7122
FLUX DENSITY (B) —Kilogausses
21
20
19
18
17
16
15
14
13
12
11
10
9
8
7
.1
.2
.4
.7
1
2
4
7
10
20
40
70
100
200
400
700
1,000
MAGNETIZING FORCE (H) —Oersteds

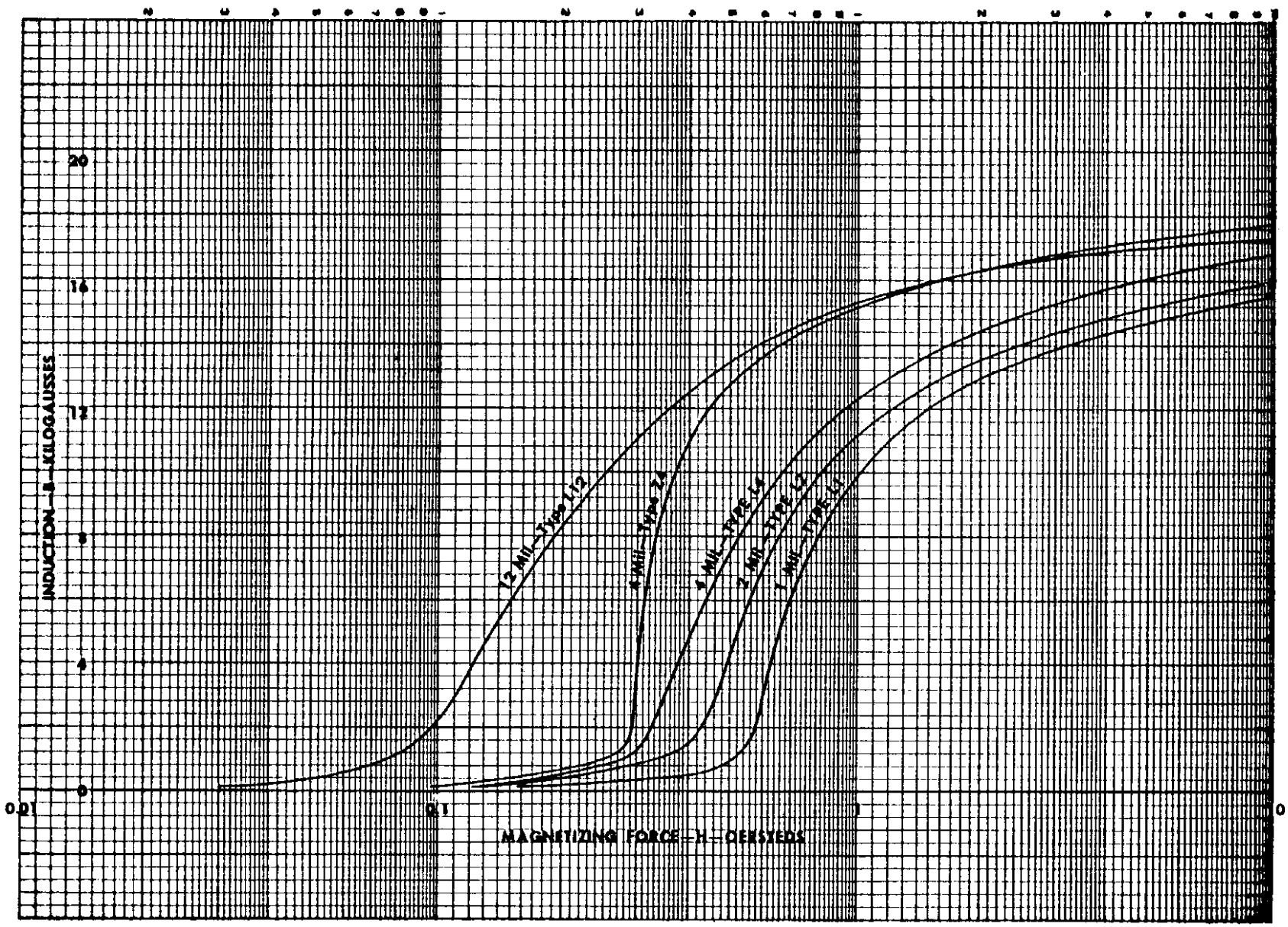


FIG. 22—TYPICAL DC MAGNETIZATION CURVES
FOR 1, 2, 4 AND 12 MIL SILECTRON TOROIDS—NOT IMPREGNATED

THE ARNOLD ENGINEERING COMPANY, MARENGO, ILLINOIS